PRODUCT CATALOG

PROXIMITY SENSORS

Inductive proximity sensors, inductive safety switches,
capacitive proximity sensors, magnetic proximity sensors

SICK
Sensor Intelligence.

REGISTER AT WWW.SICK.COM TODAY AND ENJOY ALL THE BENEFITS

- Select products, accessories, documentation and software quickly and easily.
- Create, save and share personalized wish lists.
- View the net price and date of delivery for every product.
- Requests for quotation, ordering and delivery tracking made easy.
- Overview of all quotations and orders.
- Direct ordering: submit even very complex orders in moments.
- View the status of quotations and orders at any time. Receive e-mail notifications of status changes.
- Easily repeat previous orders.
- Conveniently export quotations and orders to work with your systems.

DIRECTLY TO THE PRODUCT

Product family	Page
Inductive proximity sensors	
IMM	→ C-34
IME (DC 2-wire)	→ C-48
IME (DC 3-wire)	→ C-56
IMB (DC 2-wire)	→ C-76
IMB (DC 3-/4-wire)	→ C-86
IMF	→ C-100
IMI	→ C-108
IMN	→ C-114
IMA	→ C-120
IMP	→ C-128
SAM	→ C-136
IQM	→ C-142
IQY	→ C-146
IQB	→ C-152
IQV	→ C-158
IQG	→ C-164
IQL	→ C-170
Inductive safety switches	
IN3000 Direct	→ D-182
IN4000 Direct	→ D-188
IN4000 Standard	→ D-192
Capacitive proximity sensors	
CM	→ E-206
CM PTFE	→ E-214
CQ	→ E-218
Magnetic proximity sensors	
MM	→ F-232
MM Namur	→ F-240
MQ	→ F-246

WHAT MATERIAL NEEDS TO BE DETECTED?

Material to be detected	Application								Sensing range S_n	Sensor principle		
	Factory automation	Zones with coolants and lubricants	Hygienic and wash-down zones	Harsh environment applications	Explosion-hazardous areas	Level measurement	Object detection behind surfaces	Functional Safety		Inductive	Capacitive	Magnetic
Metal	■	■	■	■	■				60 mm	C		
Metal								■	20 mm	D		
Powders, granules, liquid, solid	■		■			■	■		25 mm		E	
Magnet	■				■		■		120 mm			F
	SICK can also offer customized solutions for all proximity sensors.											

FIELDS OF APPLICATION

WITHIN REACH – AND STILL NO CONTACT

Objects sometimes appear closer than they really are. The proximity sensors from SICK, however, are not fooled when detecting objects. They detect objects with utmost precision. And, sensor accuracy is not affected by the material of the approaching target object. Whether metal or other solid materials such as wood or paper, liquids, granules or permanent magnets, the solution for your application is within reach with the proximity sensors from SICK.

GENERAL INFORMATION
About SICK
A

FIELDS OF APPLICATION
B

INDUCTIVE PROXIMITY SENSORS
IMM, IME, IMB, IMF, IMI, IMN, IMA, IMP, SAM, IQM, IQY, IQB, IQV, IQG, IQL
C

INDUCTIVE SAFETY SWITCHES
IN3000 Direct, IN4000 Direct, IN4000 Standard
D

CAPACITIVE PROXIMITY SENSORS
CM, CM PTFE, CQ
E

MAGNETIC PROXIMITY SENSORS
MM, MM Namur, MQ
F

TAILORED SOLUTIONS
G

ACCESSORIES
Connection systems, mounting systems, other accessories
H

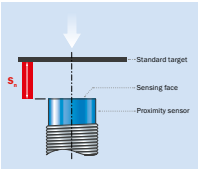

TECHNOLOGY
Overview of the inductive, capacitive and magnetic proximity sensors
I

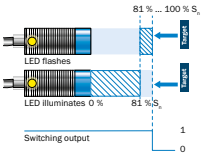

APPENDIX
Glossary, index
J

A

WE DELIVER “SENSOR INTELLIGENCE.”

SICK sensor solutions for industrial automation are the result of exceptional dedication and experience. From development all the way to service: The people at SICK are committed to investing all their expertise in providing with the very best sensors and system solutions possible.

A company with a culture of success

Almost 7,000 people are on staff, with products and services available to help SICK sensor technology users increase their productivity and reduce their costs. Founded in 1946 and headquartered in Waldkirch, Germany, SICK is a global sensor specialist with more than 50 subsidiaries and representations worldwide. The people work with pleasure at SICK.

This is demonstrated by the accolades that the company is regularly awarded in the “Great Place to Work” competition. This lively corporate culture holds strong appeal for qualified and skilled persons. In SICK, they are part of a company that ensures an excellent balance between career progression and quality of life.

Innovation for the leading edge

SICK sensor systems simplify and optimize processes and allow for sustainable production. SICK operates at many research and development centers all over the world. Co-designed with customers and universities, our innovative sensor products and solutions are made to give a decisive edge. With an impressive track record of innovation, we take the key parameters of modern production to new levels: reliable process control, safety of people and environmental protection.

A corporate culture for sustainable excellence

SICK is backed by a holistic, homogeneous corporate culture. We are an independent company. And our sensor technology is open to all system environments. The power of innovation has made SICK one of the technology and market leaders – sensor technology that is successful in the long term.

A

“SENSOR INTELLIGENCE.” FOR ALL REQUIREMENTS

SICK is a renowned expert in many industries, and is entirely familiar with the critical challenges they face. While speed, accuracy and availability take center stage in all industries, technical implementations vary greatly. SICK puts its vast experience to use to provide with precisely the solution you need.

For applications worldwide

Hundreds of thousands of installations and applications go to prove that SICK knows the different industries and their processes inside out. This tradition of uncompromising expertise is ongoing: As we move into the future, we will continue to design, implement and optimize customized solutions in our application centers in Europe, Asia and North America. You can count on SICK as a reliable supplier and development partner.

8014939/2016-08-29
Subject to change without notice

For your specific industry

With a track record of proven expertise in a great variety of industries, SICK has taken quality and productivity to new heights. The automotive, pharmaceutical, electronics and solar industries are just a few examples of sectors that benefit from our know-how. In addition to increasing speed and improving traceability in warehouses and distribution centers, SICK solutions provide accident protection for automated guided vehicles. SICK system solutions for analysis and flow measurement of gases and liquids enable environmental protection and sustainability in, for example, energy production, cement production or waste incineration plants.

For performance across the board

SICK provides the right technology to respond to the tasks involved in industrial automation: measuring, detecting, monitoring and controlling, protecting, networking and integrating, identifying, positioning. Our development and industry experts continually create groundbreaking innovations to solve these tasks.

→ www.sick.com/industries

A

SERVICES FOR MACHINES AND SYSTEMS: SICK LifeTime Services

SICK LifeTime Services is a comprehensive set of high-quality services provided to support the entire life cycle of products and applications from plant walk-through to upgrades. These services increase the safety of people, boost the productivity of machines and serve as the basis for our customers' sustainable business success. LifeTime Services range from product-independent consulting to traditional product services and are characterized by extensive industry expertise and more than 60 years of experience.

→ www.sick.com/service

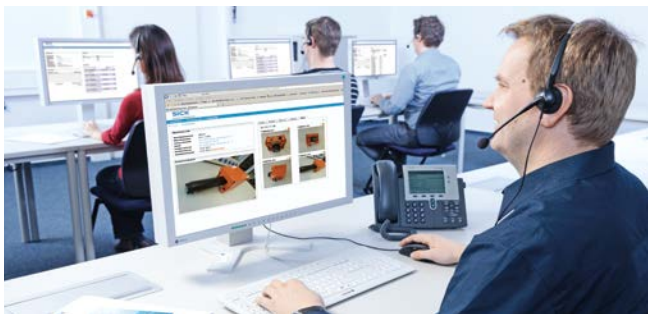

Consulting and design

- Plant walk-through
- Risk assessment
- Safety concept
- Safety software and hardware design
- Validation of functional safety
- CE-conformance check

Product and system support

- Installation
- Commissioning
- Start-up support
- Calibrations
- Telephone support
- 24-hour helpline
- SICK Remote Service
- Troubleshooting on site
- Repairs
- Exchange units
- Extended warranty

Verification and optimization

- Inspection
- Stop time measurement
- Machine safety inspection
- Electrical equipment check
- Accident investigation
- Initial verification
- Performance check
- Maintenance

Upgrade and retrofits

- Upgrade services

Training and education

- Training
- Seminars
- Web training

A

VERSATILE PRODUCT RANGE FOR INDUSTRIAL AUTOMATION

From the simple acquisition task to the key sensor technology in a complex production process: With every product from its broad portfolio, SICK offers a sensor solution that best combines cost effectiveness and safety.

→ www.sick.com/products

Photoelectric sensors

- Miniature photoelectric sensors
- Small photoelectric sensors
- Compact photoelectric sensors
- Cylindrical photoelectric sensors
- Fiber-optic sensors and fibers
- MultiTask photoelectric sensors

Proximity sensors

- Inductive proximity sensors
- Capacitive proximity sensors
- Magnetic proximity sensors

Magnetic cylinder sensors

- Positioning sensors
- Sensors for T-slot cylinders
- Sensors for C-slot cylinders
- Sensor adapters for other cylinder types

Registration sensors

- Contrast sensors
- Markless sensors
- Color sensors
- Luminescence sensors
- Fork sensors
- Array sensors
- Register sensors
- Glare sensors

Automation light grids

- Measuring automation light grids
- Switching automation light grids

8014939/2016-08-29

Subject to change without notice

Opto-electronic protective devices

- Safety laser scanners
- Safety light curtains
- Safety camera systems
- Multiple light beam safety devices
- Single-beam photoelectric safety switches
- Mirror columns and device columns

Safety switches

- Electro-mechanical safety switches
- Non-contact safety switches
- Safety command devices

sens:Control – safe control solutions

- Safe sensor cascade
- Safety controllers
- Safety relays

Gas analyzers

- Gas transmitters
- In-situ gas analyzers
- Extractive gas analyzers

Dust measuring devices

- Scattered light dust measuring devices
- Transmittance dust measuring devices
- Gravimetric dust measuring devices

Analyzer solutions

- CEMS solutions
- Process solutions

A

Traffic sensors

- Tunnel sensors
- Overheight detectors
- Visual range measuring devices

Ultrasonic gas flow measuring devices

- Volume flow measuring devices
- Mass flow measuring devices
- Flow velocity measuring devices
- Gas flow meters

Identification solutions

- Image-based code readers
- Bar code scanners
- RFID
- Hand-held scanners
- Connectivity

Vision

- 2D vision
- 3D vision

Distance sensors

- Short range distance sensors (Displacement)
- Mid range distance sensors
- Long range distance sensors
- Linear measurement sensors
- Ultrasonic sensors
- Optical data transmission
- Position finders

Detection and ranging solutions

- 2D laser scanners
- 3D laser scanners
- Radar sensors

Motor feedback systems

- Motor feedback system rotary HIPERFACE®
- Motor feedback system rotary HIPERFACE DSL®
- Motor feedback system rotary incremental
- Motor feedback system rotativ incremental with commutation
- Motor feedback system linear HIPERFACE®

Encoders

- Absolute encoders
- Incremental encoders
- Linear encoders
- Wire draw encoders
- Safety encoders

Fluid sensors

- Level sensors
- Pressure sensors
- Flow sensors
- Temperature sensors

System solutions

- Customized analyzer systems
- Collision awareness systems
- Robot guidance systems
- Object detection systems
- Profiling systems
- Quality control systems
- Security systems
- Track and trace systems
- Functional safety systems

B

8014939/2016-08-29
Subject to change without notice

B

MATERIAL IS NOT EVERYTHING

Complex problems are often characterized by many different requirements. It is not an easy task to find a suitable solution in such situations. SICK is happy to take on these challenges with the declared objective of finding a special solution for every application.

Factory automation | Zones with coolants and lubricants | Hygienic and washdown zones | Harsh environment applications | Explosion-hazardous areas | Level measurement | Object detection behind surfaces | Functional Safety

Fields of application

- Factory automation, page B-14
- Zones with coolants and lubricants, page B-15
- Hygienic and washdown zones, page B-16
- Harsh environment applications, page B-18
- Explosion-hazardous areas, page B-19
- Level measurement, page B-20
- Object detection behind surfaces, page B-21
- Safe position monitoring of machine parameters, page B-22

Factory automation

FACTORY AUTOMATION

B

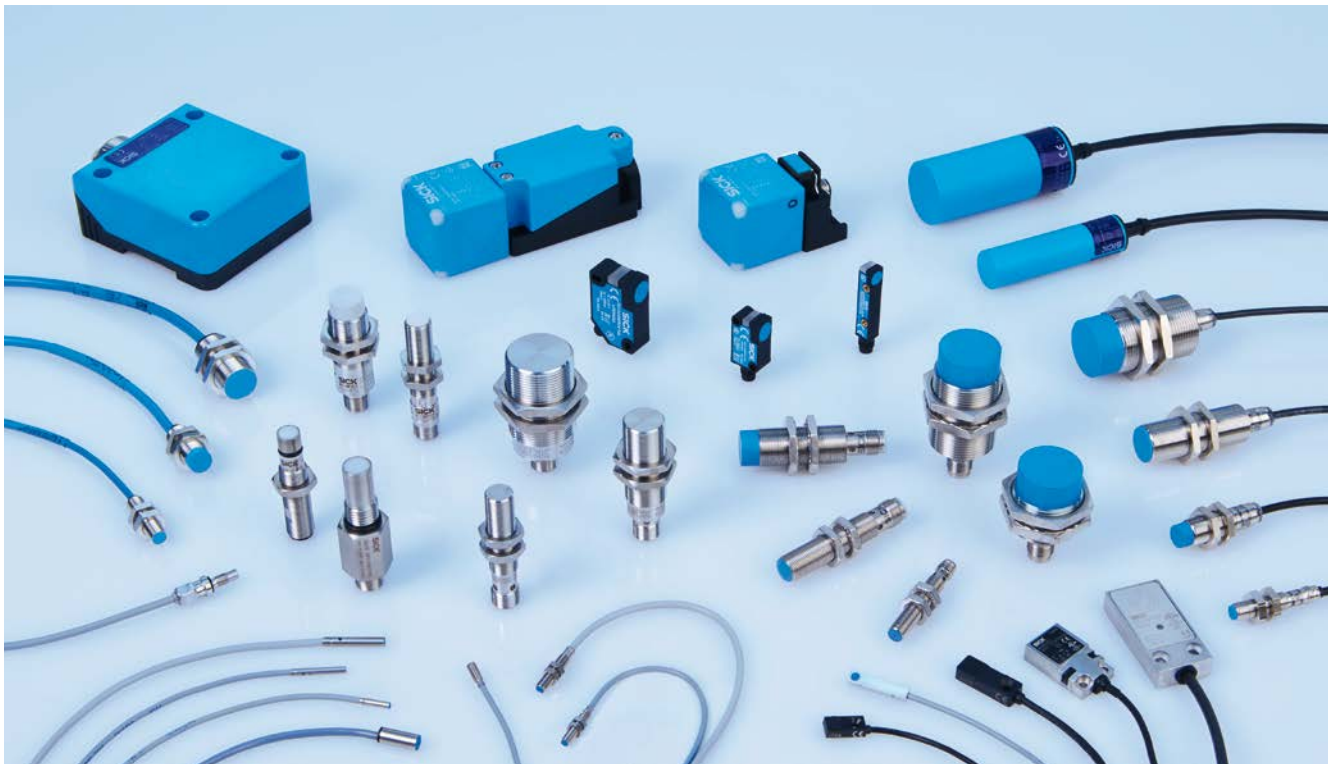

Wear-free and in practical terms unaffected by external influences, inductive proximity sensors detect the presence and distance of metallic objects. This means they are ideally suitable for a variety of detection, counting and positioning tasks in factory automation.
The most important requirements for inductive sensors are precision, maximum availability, and a long service life. Inductive sensors from SICK pack advanced technology into the smallest of spaces. Due to improved production tolerances, SICK sensors with ASIC technology deliver much higher precision than standard discretely mounted devices. They are not digitally synchronized until after the production process is complete, essentially ruling out production-related tolerances of the sensing range. Even the high level of electromagnetic compatibility of the sensors is a result of state-of-the-art ASIC. A molded housing interior, which completely encapsulates the electronics, greatly increases shock and vibration resistance. The customer benefits from high positioning accuracy in the machine and long-term reliability.

For metals

IMM C-34
IME C-48
IMA C-120
IMP C-128
SAM C-136
IQM C-142
IQY C-146
IQB C-152
IQV C-158
IQG C-164
IQL C-170

For liquids, bulk materials, other solids

CM E-206
CQ E-218

For permanent magnets

MM F-232
MQ F-246

You can find selection guides at the beginning of the corresponding chapter.

8014939/2016-08-29
Subject to change without notice

Zones with coolants and lubricants

ZONES WITH COOLANTS AND LUBRICANTS

Cutting oils and cooling lubricants are extremely aggressive towards system components and often cause sensor malfunctions. The IMB sensor family is designed for frequent contact with these materials. Thanks to its sturdy design and mechanical resistance to nearly all common cutting oils and cooling lubricants, the IMB sensor family sets a new standard for inductive proximity sensors in machine tools construction in particular.

Typical applications

- CNC machining centers
- Tool changers
- Workpiece handling

Advantages

- Optimal resistance against oils and cooling lubricants
- Extreme mechanical ruggedness
- Quick and easy mounting due to optical adjustment indicator
- High degree of flexibility and communication options thanks to IO-Link

For metals

IMB C-76

Hygienic and washdown zones

HYGIENIC AND WASHDOWN ZONES

B

Flawless reliability and durability are key requirements when using sensors in hygienic and washdown zones. In the pharmaceutical and the food and beverage industries, washdown environments represent just one type of challenge: The sensors must also be able to withstand the daily high-pressure cleaning process, along with high thermal and mechanical loads.

While the use of rugged materials and the capacity for thorough cleaning are the main priorities for process automation, high levels of accuracy, rapid response times, straightforward commissioning, and the option to run diagnostics on sensors remotely are key factors within factory automation.
Inductive proximity sensors cover all options by delivering maximum automation performance while also complying with the demands of the food industry. Extended, highly accurate sensing ranges mean that reliable switching behavior is guaranteed, even in the event of dramatic changes in temperature. The materials used – including stainless steel and LCP – have been approved by the FDA. The sensor is certified by Ecolab and is extremely watertight with enclosure ratings IP 68 and IP 69K. The option of communication via IO-Link opens up new opportunities for configuration and diagnostics.

8014939/2016-08-29
Subject to change without notice

B

SICK stainless steel sensors stand up to test with long-term, reliable operation and maximum availability with the help of these four criteria:

- Chemical resistance
- Thermal resistance
- Tightness
- Market standards

Chemical resistance

A stainless steel sensor by SICK is resistant to high-pressure cleaning, cleaning with foam or P3 cleaning agents, and subsequent rinsing. The LCP front cap and the LED windows are resistant to all cleaning agents typically used in this industry.

Thermal resistance

Stainless steel sensors are subjected to dramatic changes in temperature resulting from cleaning with water at approx. 80 °C in a cold environment at between 5 and 10 °C, for example. Constant changes in temperature cause what is known as the pump effect: The differences in pressure “pull” moisture into the device. The highly resistant plastics, along with the stainless steel, are able to resist the temperatures, and the tightly sealed housing suppresses the pump effect.

Water tight

SICK stainless steel sensors have been proving their worth in practical applications for many years. The tightness of the sensors is due to the special mold which, combined with an O-ring seal, completely encapsulates the electronic components. With a water shock test, tests for enclosure ratings IP 66, IP 67, IP 68, and IP 69K, and a service life test, tightness is tested on a regular basis.

Market standards

Thanks to careful material selection and well-thought-out design and build, the stainless steel version of the proximity sensors from SICK meet all legal requirements and are aligned with the following standards and directives:

- DIN 10516: 2009-05
- DIN EN ISO 14159: 2008-07
- DIN EN 1672-2: 2005 + A1
- Machinery Directive 2006/42/EC
- Directives 1935/2004/EC and 10/2011
- Designed according to EHEDG guidelines
- Ecolab-certified
- Materials meeting FDA requirements

For metals

IMF C-100
IMI C-108

For liquids, bulk materials, other solids

CM PTFE E-214

A selection guide for inductive proximity sensors can be found on page C-26.

A selection guide for capacitive proximity sensors can be found on page E-202.

Harsh environment applications

HARSH ENVIRONMENT APPLICATIONS

B

Some situations demand significant reliability and toughness. Inductive proximity sensors from SICK are a multi-purpose solution in this area. Equipped with all features the market demands, they are able to deal with any situation. Regardless of the challenges presented by the site of operation. In the end, opting for SICK proximity sensors is a simple decision.

When outdoors or anywhere with difficult ambient conditions, SICK proximity sensors utilize their strengths in a particularly impressive way. One sensor covers a variety of applications.

Typical applications

- Container spreaders
- Wind power plants
- Car wash facilities
- Outdoor gates and barriers

Advantages

- Protected against water
- Immune to temperature fluctuations
- Mechanically rugged
- Shock and vibration resistant
- Corrosion-resistant

For metals

IMB C-76
IMI C-108
IQB C-152
IQG C-164

A selection guide for inductive proximity sensors can be found on page C-26.

8014939/2016-08-29
Subject to change without notice

Explosion-hazardous areas

EXPLOSION-HAZARDOUS AREAS

Potentially explosive atmospheres can arise wherever dust, flammable gases, or flammable liquids are manufactured, transported, processed, or stored. An explosion can occur if three factors come together at the same time:

- A flammable substance, e.g., in the form of gas, vapor, mist, or dust, is present
- Sufficient oxygen is present (e.g., in the ambient air)
- There is an ignition source. In addition to sparks, this can also include hot surfaces or optical radiation energy.

SICK offers sensors that have been developed especially for explosion-hazardous areas. Based on directive 2014/34/EU, these sensors are designed in accordance with the relevant standards.

SICK proximity sensors are available for the following EX fields of application

Responsibility of the sensor manufacturer	Responsibility of the machine manufacturer					
Category	Can be used in zone (gas)	Can also be used in zone (gas)	Can be used in zone (dust)	Can also be used in zone (dust)	Definition 2014/34/EU potentially explosive atmospheres is present	Certification by
1G/1D	0	1 and 2	20	21 and 22	Always, for long periods, or often	Notified body
2G/2D	1	2	21	22	Occasional	Notified body

G = gas; D = dust.

For metals

1G/1D und 2G/2D

IMN C-114

For permanent magnets

2G/2D

MM Namur F-240

Level measurement

LEVEL MEASUREMENT

B

Level and feed monitoring is the specialty of the capacitive proximity sensors. From solid material, such as paper or wood, to granules or liquids, the sensors quickly and reliably detect the status of the product during accelerated production process and final inspection.

The sensors are also remarkably resistant to faults. Impurities, contamination, dust, and airborne spray particles have little effect on them, nor does electromagnetic interference. In addition, their sensitivity can be quickly and easily adjusted to changing ambient conditions. Thanks to their compact design, the capacitive proximity sensors need very little installation space and really live up to their potential in very tight spaces. The non-contact measurement function makes drill holes in containers or tank walls unnecessary and enables quick installation. It's no wonder that they are used in a wide variety of industries, such as the food or the automotive industry as well as in storage and conveyor systems.

For liquids, bulk materials, other solids

CM E-206
CM PTFE E-214
CQ E-218

A selection guide for capacitive proximity sensors can be found on page E-202.

8014939/2016-08-29
Subject to change without notice

Object detection behind surfaces

OBJECT DETECTION BEHIND SURFACES

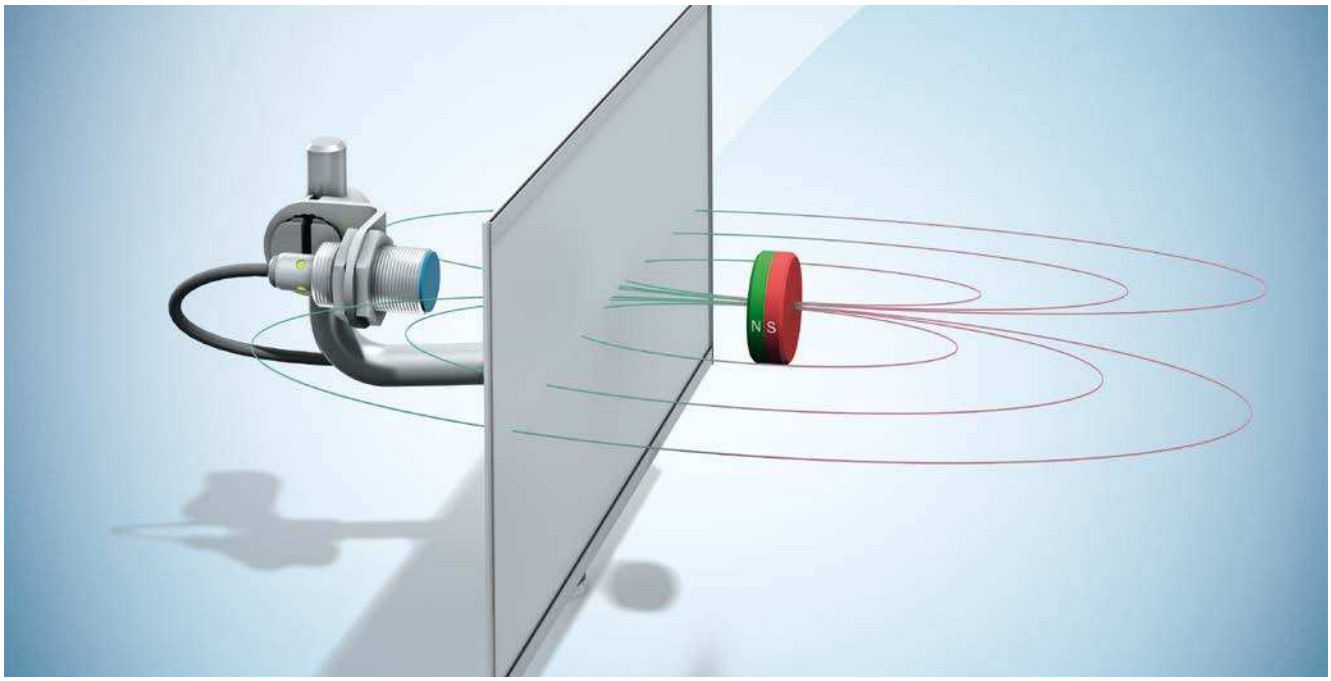

SICK proximity sensors ensure the right view through nearly any conceivable material. They are the ideal solution for applications in which objects have to be detected through surfaces.

Whether for storage containers, covers or other surfaces and obstacles: The magnetic and capacitive proximity sensors from SICK reliably provide the relevant background information on the objects located behind the surface. This enables spacial separation of object and sensor and makes it possible to install the sensor in a protected area without contact with aggressive media, dirt or moisture.

The ideal type of proximity sensor depends on the respective application. Capacitive proximity sensors detect various materials without making contact, therefore enabling quality and presence monitoring.

Magnetic proximity sensors reliably detect permanent magnets and allow very high sensing ranges – even for the detection of objects behind surfaces.

Advantages

- Reliable detection (e.g. level monitoring through container walls) without the sensor coming into contact with aggressive media
- Protected assembly of the sensor or the magnets is possible, e.g. if application conditions are rough (applications outdoors, in agricultural or construction machines)
- Reliable detection regardless of dirt by using permanent magnets
- Very high sensing ranges of up to 120 mm possible

For liquids, bulk materials, other solids

CM E-206
CM PTFE E-214
CQ E-218

A selection guide for capacitive proximity sensors can be found on page E-202.

For permanent magnets

MM F-232
MM Namur F-240
MQ F-246

A selection guide for magnetic proximity sensors can be found on page F-228.

Functional Safety

Functional Safety

SAFE POSITION MONITORING OF MACHINE PARAMETERS

B

In addition to inductive proximity sensors, inductive safety sensors are also used in machines; these sensors primarily implement safety-related functions, not automation functions. With a defined safety level, machine manufacturers, operators and users can rely on the safety of the machine.

In the last few years, awareness of safe machines has grown along with increasing degrees of automation. Consequently, requirements on the protective devices in machines are constantly growing and are also specified in guidelines. In safety technology, a certain level of safety is required depending on the application. This level of safety is, on the one hand, achieved by organizational and technical measures of functional safety, and on the other hand, by the detection of unwanted errors as well as the reduction in manipulation incentives for people.

The inductive safety sensor detects metallic objects like an inductive proximity sensor. If the metallic object deviates from the target position, the safety-related logic unit detects the safety-related signal and forwards it to the control elements in the safety chain (conductors, drives, valves). This stops the machine's dangerous movement.

In contrast to inductive proximity sensors for automation tasks, an inductive safety sensor contains mechanisms for detecting errors. As soon as the sensor detects an error, it switches the entire safety chain into a safe state by switching off the machine or a part of the machine. Inductive safety sensors from SICK are designed and tested in line with standards IEC 61508 and EN ISO 62061 in order to guarantee these functions. The safety-related parameters are specified in the technical data of the sensors.

Detailed information on machine safety and safety technology can be found in
➜ „Guide for Safe Machinery“ (8007988)

For metals

IN3000 Direct. D-182
IN4000 Direct. D-188
IN4000 Standard. D-192

A selection guide for inductive safety switch can be found on page D-178.

8014939/2016-08-29
Subject to change without notice

C

INDUCTIVE PROXIMITY SENSORS

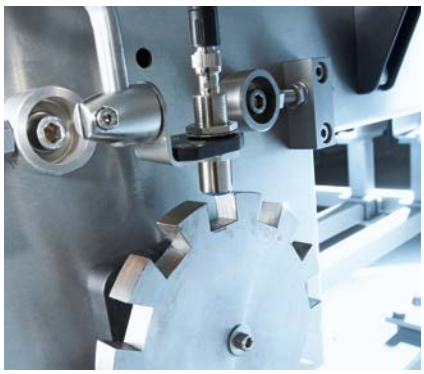

Reliable, powerful, rugged. Inductive proximity sensors from SICK

Millions of inductive proximity sensors are currently in use in virtually all industries. They detect metal objects without contact, and are characterized by a long service life and extreme ruggedness. With the latest ASIC technology, SICK's sensors offer the ultimate in precision and reliability. SICK can provide the right solution to meet your requirements every time – from cylindrical or rectangular standard sensors with standard, extended or triple operating distance, to special sensors for explosive zones and harsh environments. Our sensors are the intelligent, reliable route to implementing industry-specific and customized solutions to any task involving automation.

8014939/2016-08-29
Subject to change without notice

C

Selection guide C-26
Product family overview C-28
Technology I-284

IMM C-34
Miniature sensors for industrial applications
Ultra short . . . . . C-34 Standard C-40

IME. C-48
The economic standard for use in industrial environments
DC 2-wire. . . . . C-48 DC 3-wire. C-56

IMB. C-76
The rugged standard for use in harsh ambient conditions
DC 2-wire. . . . . C-76 DC 3-/4-wire. C-86

IMF. C-100
The economic standard for use in the food industry

IMI C-108
Robust full metal sensors for use in the food industry

IMN. C-114
NAMUR sensors for explosive zones

IMA. C-120
Analog sensors with triple sensing range for use in industrial environments

IMP. C-128
High-pressure-resistant sensors for hydraulic applications

SAM C-136
The simple and intelligent way of speed monitoring

IQM. C-142
Rectangular miniature sensors for use in industrial environments

IQY C-146
Slim rectangular housings for use in industrial environments

IQB C-152
Small rectangular housings for use in industrial environments

IQV C-158
Flat rectangular housings for use in industrial environments

IQG. C-164
Compact rectangular housings for use in harsh ambient conditions

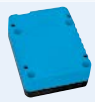

IQL C-170
Large rectangular housings for use in industrial environments

C

OVERVIEW OF INDUCTIVE PROXIMITY SENSORS

Product			Housing																			
			Design			Size										Material				Properties		
			Cylindrical thread design	Cylindrical smooth housing	Rectangular	M4	M5	M8	M12	M14	M18	M30	ø 3 mm	ø 4 mm	ø 6.5 mm	Details, see starting on p. C-142	Stainless steel	Metal	VISTAL™	Plastic	IP 69K	High-pressure resistant
Inductive proximity sensors																						
	IMM		■	■		■	■						■	■	■		■	■			■	■
	IME	DC 2-wire	■					■	■		■	■						■				
	IME	DC 3-wire	■					■	■		■	■						■				
	IMB	DC 2-wire	■					■	■		■	■					■				■	
	IMB	DC 3-/4-wire	■					■	■		■	■					■				■	
	IMF		■					■	■		■	■					■				■	
	IMI		■						■		■	■					■				■	
	IMN		■					■	■		■	■						■				
	IMA		■					■	■		■	■						■				
	IMP		■				■	■	■	■								■				■
	SAM		■															■				
	IQM				■											■				■		
	IQY				■											■				■		
	IQB				■											■			■			
	IQV				■											■		■				
	IQG				■											■				■	■	
	IQL				■											■				■		

8014939/2016-08-29
Subject to change without notice

C

	Sensor properties										Application					Sensing range S_n	Page
	Sensing range			Electrical wiring				Switching output									
	Standard sensing range	Extended sensing range	Triple sensing range	DC 2-wire	AC/DC 2-wire	DC 3-wire	DC 4-wire	NAMUR output	Analog output	IO-Link	Factory automation	Zones with coolants and lubricants	Hygienic and washdown zones	Harsh environment applications	Explosion-hazardous areas	5 10 15 20 25 30 35 40 45 50 55 60	
	■					■				■	■					4 mm	→ C-34
	■	■	■	■							■					20 mm	→ C-48
	■	■	■			■	■				■					28 mm	→ C-56
	■	■		■								■		■		20 mm	→ C-76
	■	■				■	■			■		■		■		20 mm	→ C-86
	■	■				■	■						■			20 mm	→ C-100
			■			■							■	■		40 mm	→ C-108
	■							■							■	15 mm	→ C-114
	■	■	■						■		■					0 mm ... 40 mm	→ C-120
	■					■	■				■					3 mm	→ C-128
	■						■			■	■					10 mm	→ C-136
	■					■					■					3 mm	→ C-142
	■					■					■					4 mm	→ C-146
	■					■					■			■		8 mm	→ C-152
	■					■	■				■					7 mm	→ C-158
	■					■	■				■			■		40 mm	→ C-164
	■				■	■	■				■					60 mm	→ C-170

PRODUCT FAMILY OVERVIEW

C

	IMM	**IME**
	Miniature sensors for industrial applications	The economic standard for use in industrial environments
Technical data overview		
Housing	Cylindrical thread design / Cylindrical smooth housing	Cylindrical thread design
Thread size	M4 x 0.5 M5 x 0.5	M8 x 1 M12 x 1 M18 x 1 M30 x 1.5
Housing diameter	Ø 3 mm Ø 4 mm Ø 6.5 mm	–
Sensing range S_n	0.6 mm ... 4 mm	1.5 mm ... 38 mm
Electrical wiring	DC 3-wire	DC 2-wire / DC 3-wire
Housing material	Stainless steel V2A	Nickel-plated brass
Enclosure rating	IP 67	IP 67
At a glance		
	• Design: M4 to M5, diameter from 3 mm to 6.5 mm • Extended sensing ranges: 0.6 mm to 4 mm • Electrical configuration: DC 3-wire • Enclosure rating: IP 67 • Temperature range: –25 °C to +70 °C • Rugged stainless-steel housing; plastic sensing face • IO-Link ready • Extremely compact, lightweight, and space-saving	• Types: M8 to M30 • Extended sensing ranges: 1.5 mm to 38 mm • Electrical configuration: DC 3-/4-wire, DC 2-wire • Enclosure rating: IP 67 • Temperature range: –25 °C to +75 °C • Nickel-plated brass housing; plastic sensing face
Detailed information	➜ C-34	➜ C-48

C

	IMB	**IMF**	**IMI**
	The rugged standard for use in harsh ambient conditions	The economic standard for use in the food industry	Robust full metal sensors for use in the food industry
	Cylindrical thread design	Cylindrical thread design	Cylindrical thread design
	M8 x 1 M12 x 1 M18 x 1 M30 x 1.5	M8 x 1 M12 x 1 M18 x 1 M30 x 1.5	M12 x 1 M18 x 1 M30 x 1.5
	–	–	–
	2 mm ... 20 mm	2 mm ... 20 mm	6 mm ... 40 mm
	DC 2-wire / DC 3-wire / DC 4-wire	DC 3-wire / DC 4-wire	DC 3-wire
	Stainless steel V2A	Stainless steel V4A	Stainless steel V4A
	IP 68, IP 69K	IP 68, IP 69K	IP 68, IP 69K
	• Types: M8 to M30 • Extended sensing ranges: 2 mm to 20 mm • Electrical configuration: DC 3-/4-wire, DC 2-wire • Enclosure rating: IP 68, IP 69K • Temperature range: –40 °C to +100 °C) • Rugged stainless-steel housing; plastic sensing face • Optical adjustment indicator, IO-Link-ready • Resistant to oils and cooling lubricants; suitable for use outdoors	• Types: M8 to M30 • Extended sensing ranges: 2 mm to 20 mm • Electrical configuration: DC 3- and 4-wire • Enclosure rating: IP 68, IP 69K • Temperature range: –40 °C to +100 °C • Food-compatible stainless-steel housing, plastic sensing face • Optical adjustment indicator, IO-Link-ready • Resistant to industrial cleaning agents, Ecolab-certified	• Types: M8 to M30 • Triple sensing ranges: 6 mm to 40 mm • Electrical configuration: DC, 3-wire • Enclosure rating: IP 68, IP 69K • Temperature range: –25 °C to +85 °C • Food-compatible stainless-steel housing, stainless steel sensing face • Sensing face made of food-compatible stainless steel • Resistant against cleaning agents
	➜ C-76	➜ C-100	➜ C-108

PRODUCT FAMILY OVERVIEW

C

	IMN	**IMA**	
	NAMUR sensors for explosive zones	Analog sensors with triple sensing range for use in industrial environments	
Technical data overview			
Housing	Cylindrical thread design	Cylindrical thread design	
Thread size	M8 x 1 M12 x 1 M18 x 1 M30 x 1.5	M8 x 1 M12 x 1 M18 x 1 M30 x 1.5	
Sensing range S_n	1 mm ... 15 mm	4 mm ... 40 mm	
Electrical wiring	–	–	
Housing material	Nickel-plated brass	Nickel-plated brass	
Enclosure rating	IP 67	IP 67	
At a glance			
	• Types: M8 to M30 • Sensing ranges: 1 mm to 15 mm • NAMUR according to DIN EN 60947-5-6 • Enclosure rating: IP 67 • Temperature range: –20 °C to +70 °C • Nickel-plated brass housing; plastic sensing face • ATEX device category 1G and 2G • Suitable for applications in explosion-hazardous areas	• Types: M8 to M30 • Extended detection ranges: 0 mm to 40 mm • Analog output signal 0 V ... 10 V and 4 mA ... 20 mA • Enclosure rating: IP 67 • Temperature range: –25 °C to +75 °C • Nickel-plated brass housing; plastic sensing face • High resolution and repeatability • Distance control and continuous position detection	
Detailed information	➜ C-114	➜ C-120	

C

	IMP	**SAM**
	High-pressure-resistant sensors for hydraulic applications	The simple and intelligent way of speed monitoring
	Cylindrical thread design	Cylindrical thread design
	M5 x 0.5 M8 x 1 M12 x 1 M14 x 1.5	M18 x 1 M30 x 1.5
	1 mm ... 3 mm	7 mm / 10 mm
	DC 3-wire / DC 4-wire	DC 4-wire
	Stainless steel V2A / V4A	Nickel-plated brass
	IP 68	IP 67
	• Types: M5, M8, M12 and M14 • Extended sensing ranges: 1 mm to 3 mm • Electrical configuration: DC 3- and 4-wire • Enclosure rating: IP 68 • Temperature range: –25 °C to +100 °C • Stainless steel housing with active surface made from stable high-performance ceramic • Pressure resistant up to 500 bar, gas-tight front • Expected service life of up to 1 million pressure cycles	• Types: M18 and M30 • Sensing ranges of up to 10 mm flush • Speed and acceleration monitoring • Monitoring range: 6 to 12,000 pulses/min. and 0.1 to 2 pulses/sec.[2] • Switching and pulse output • Intelligent start-up delay • Speed monitoring can be flexibly configured via two thresholds • Flexible sensor settings, monitoring, extended diagnostics, and visualization thanks to IO-Link
	➜ C-128	➜ C-136

PRODUCT FAMILY OVERVIEW

C

	IQM	IQY	IQB
	Rectangular miniature sensors for use in industrial environments	Slim rectangular housings for use in industrial environments	Small rectangular housings for use in industrial environments
Technical data overview			
Housing	Rectangular	Rectangular	Rectangular
Dimensions	8 mm x 16 mm x 4 mm 10 mm x 30 mm x 6 mm	5 mm x 5 mm x 25 mm 8 mm x 8 mm x 40 mm	10 mm x 16 mm x 28 mm 12 mm x 26 mm x 40 mm
Sensing range S_n	1.5 mm / 3 mm	0.8 mm ... 4 mm	3 mm ... 8 mm
Electrical wiring	DC 3-wire	DC 3-wire	DC 3-wire / DC 4-wire
Housing material	PA6-GF30	Nickel-plated brass / VISTAL™	VISTAL™
Enclosure rating	IP 67	IP 67 / IP 68	IP 68
At a glance			
	• Types: 8 mm x 16 mm x 4 mm or 10 mm x 30 mm x 6 mm • Extended sensing ranges: 1.5 mm to 3 mm • Electrical configuration: DC 3-wire • Enclosure rating: IP 67 • Temperature range: –20 °C to +70 °C • Plastic housing • Flat, space-saving and light design	• Types: 5 mm x 5 mm x 25 mm or 8 mm x 8 mm x 40 mm • Extended sensing ranges: 0.8 mm to 4 mm • Electrical configuration: DC 3-wire • Enclosure rating: IP 67 or IP 68 • Temperature range: –25 °C to +75 °C • Tough VISTAL™ housing • Thin version with 270° output state display	• Types: 10 mm x 16 mm x 28 mm or 12 mm x 26 mm x 40 mm • Extended sensing ranges: 2 mm to 8 mm • Electrical configuration: DC 3-/4-wire • Enclosure rating: IP 68 • Temperature range: –25 °C to +75 °C • Tough VISTAL™ housing • Small version with 270° output state display
Detailed information	➜ C-142	➜ C-146	➜ C-152

C

			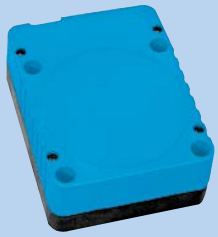
	IQV	**IQG**	**IQL**
	Flat rectangular housings for use in industrial environments	Compact rectangular housings for use in harsh ambient conditions	Large rectangular housings for use in industrial environments
	Rectangular	Rectangular	Rectangular
	20 mm x 32 mm x 8 mm 25 mm x 50 mm x 10 mm	40 mm x 40 mm x 66 mm 40 mm x 40 mm x 118 mm 40 mm x 40 mm x 132 mm	80 mm x 40 mm x 105 mm 80 mm x 40 mm x 112 mm
	7 mm / 5 mm	20 mm / 40 mm	60 mm / 50 mm
	DC 3-wire / DC 4-wire	DC 3-wire / DC 4-wire	DC 3-wire DC 4-wire AC/DC 2-wire
	GD Zn	PA 66	PPE
	IP 67	IP 68, IP 69K	IP 65 / IP 67
	• Types: 20 mm x 32 mm x 8 mm or 25 mm x 50 mm x 10 mm • Extended sensing ranges: 5 mm to 7 mm • Electrical configuration: DC 3-/4-wire • Enclosure rating: IP 67 • Temperature range: –25 °C to +70 °C • Metal housing, plastic sensing face • Flat housing made of robust metal	• Type: 40 mm x 40 mm • Extended sensing ranges: 15 mm to 40 mm • Electrical configuration: DC 3-/4-wire • Enclosure rating: IP 67, IP 68, IP 69K • Temperature range: –25 °C to +85 °C • Plastic housing • Push-lock mounting system • Sensor head can be rotated in five directions	• Type: 80 mm x 80 mm • Longer sensing ranges: 50 mm to 60 mm • Electrical configuration: DC 3-/4-wire, or AC/DC 2-wire • Enclosure rating IP 65 or IP 67 • Temperature range: –25 °C to +80 °C • Plastic housing • Programmable N/O or N/C function • Sensing range setting via potenti-ometer
	➜ C-158	➜ C-164	➜ C-170

MINIATURE SENSORS FOR INDUSTRIAL APPLICATIONS

C

Product description

The inductive proximity sensors in the IMM product family stand out from the crowd thanks to their low spatial requirements and high reliability. Their state-of-the-art ASIC technology offers miniaturization without compromise. And with maximum performance, sensing ranges of up to 4 mm, integrated electronics, suppressors, and output state LEDs, they offer everything you could possibly want. Their small size and low weight make these inductive miniature sensors ideal for performing highly dynamic pick-and-place applications, integrating into compact assemblies, and monitoring faster handling and mounting processes. Thanks to the IO-Link communication, the sensors are also ideally equipped for future requirements.

At a glance

- Design: M4 to M5, diameter from 3 mm to 6.5 mm
- Extended sensing ranges: 0.6 mm to 4 mm
- Electrical configuration: DC 3-wire
- Enclosure rating: IP 67
- Temperature range: –25 °C to +70 °C
- Rugged stainless-steel housing; plastic sensing face
- IO-Link ready
- Extremely compact, lightweight, and space-saving

Your benefits

- Easy installation in applications with limited available space
- Reliable detection of fast handling and mounting processes
- High positioning accuracy and precise switching behavior
- Great freedom with respect to machine design
- The low weight of the sensor enables fast acceleration in dynamic handling processes
- IO-Link provides easy data access from the PLC
- Simple sensor diagnostics, device change, and identification through IO-Link

Additional information

Detailed technical data C-35
Ordering information C-36
Dimensional drawings C-37
Connection diagram C-37
Response diagram C-38
Installation note C-38
Accessories C-39

➜ www.sick.com/IMM

For more information, simply enter the link or scan the QR code and get direct access to technical data, CAD design models, operating instructions, software, application examples, and much more.

8014939/2016-08-29
Subject to change without notice

Detailed technical data

Features

	IM04	IH03	IHP03	IH06
Housing	Cylindrical thread design	Cylindrical smooth housing		
Thread size	M4 x 0.5	–		
Diameter	Ø 4 mm	Ø 3 mm		Ø 6.5 mm
Pressure resistance	–		≤ 150 bar	–
Sensing range S_n	1 mm	1 mm	0.8 mm	1.5 mm
Installation type	Flush			
Switching frequency	8,000 Hz			5,000 Hz
Output type	PNP / NPN (depending on type)			
Output function	NO			NO / NC (depending on type)
Electrical wiring	DC 3-wire			
Enclosure rating	IP 67 [1]		IP 68 IP 69K	IP 67 [1]
Special features	Capable of communication via IO-Link 1.0			–

[2] According to EN 60529.

Mechanics/electronics

	IM04	IH03	IHP03	IH06
Supply voltage	10 V DC ... 30 V DC			
Ripple [1]	≤ 20 %			
Voltage drop	≤ 2 V [2]			≤ 2 V [3]
Current consumption [4]	≤ 10 mA			
Time delay before availability	≤ 10 ms			
Hysteresis	1 % ... 10 %			
Repeatability [5]	≤ 2 %			≤ 1.5 %
Temperature drift (of S_r)	± 10 %			
EMC	EN 60947-5-2 IEC 61000-4-2: (Testlevel 2) IEC 61000-4-4: (Testlevel 3)		EN 60947-5-2 IEC 61000-4-2: (Testlevel 2) IEC 61000-4-4: (Testlevel 2)	EN 60947-5-2 IEC 61000-4-2: (Testlevel 2) IEC 61000-4-4: (Testlevel 3)
Continuous current I_a	≤ 100 mA			≤ 200 mA
Connection type	Cable, 2 m, PUR [6] Cable with male connector, M8, 0.2 m, PUR [6] (depending on type)			Cable, 2 m, PVC Male connector, M8 (depending on type)
Short-circuit protection	✔			
Reverse polarity protection	✔			
Shock and vibration resistance	30 g, 11 ms / 10 ... 55 Hz, 1 mm			
Ambient operating temperature	–25 °C ... +70 °C			
Housing material	Stainless steel (V2A)			
Sensing face material	Plastic, POM		Ceramics, ZrO2	Plastic, PA 66
Tightening torque, max.	≤ 0.8 Nm	–		

[1] Of V_S.
[2] With Ia = 100 mA.
[3] With Ia = 200 mA.
[4] Without load.
[5] Ub = 20 V DC ... 30 V DC, Ta = 23 °C ± 5 °C.
[6] Do not bend below 0 °C.

C

Reduction factors

	IM04	IH03	IHP03	IH06
Note	The values are reference values which may vary			
Stainless steel (V2A, 304)	Approx. 0.8			
Aluminum (Al)	Approx. 0.5			Approx. 0.45
Copper (Cu)	Approx. 0.45			Approx. 0.4
Brass (Br)	Approx. 0.6			Approx. 0.5

Ordering information

Other models ➜ www.sick.com/IMM

C

IM04

Sensing range S_n	Output function	Output type	Connection	Connection diagram	Type	Part no.
1 mm	NO	PNP	Cable, 3-wire, 2 m, PUR	Cd-001	IM04-01BPSVU2K	6058029
			Cable with connector M8, 3-pin, 0.2 m, PUR	Cd-002	IM04-01BPSVR8K	6058031
		NPN	Cable, 3-wire, 2 m, PUR	Cd-001	IM04-01BNSVU2K	6058028
			Cable with connector M8, 3-pin, 0.2 m, PUR	Cd-002	IM04-01BNSVR8K	6058030

IH03

Sensing range S_n	Output function	Output type	Connection	Connection diagram	Type	Part no.
1 mm	NO	NPN	Cable, 3-wire, 2 m, PUR	Cd-001	IH03-01BNSVU2K	6058024
			Cable with connector M8, 3-pin, 0.2 m, PUR	Cd-002	IH03-01BNSVR8K	6058026
		PNP	Cable, 3-wire, 2 m, PUR	Cd-001	IH03-01BPSVU2K	6058025
			Cable with connector M8, 3-pin, 0.2 m, PUR	Cd-002	IH03-01BPSVR8K	6058027

IHP03

Sensing range S_n	Output function	Output type	Connection	Connection diagram	Type	Part no.
0.8 mm	NO	NPN	Cable, 3-wire, 2 m, PUR	Cd-001	IHP03-0B8NSVU2K	6058032
		PNP	Cable, 3-wire, 2 m, PUR	Cd-001	IHP03-0B8PSVU2K	6058033

IH06

Sensing range S_n	Output function	Output type	Connection	Connection diagram	Type	Part no.
1.5 mm	NO	NPN	Cable, 3-wire, 2 m, PVC	Cd-001	IH06-1B5NS-VWK	6020166
			Connector M8, 3-pin	Cd-002	IH06-1B5NS-VTK	6020170
		PNP	Cable, 3-wire, 2 m, PVC	Cd-001	IH06-1B5PS-VWK	6020165
			Connector M8, 3-pin	Cd-002	IH06-1B5PS-VTK	6020169
	NC	PNP	Cable, 3-wire, 2 m, PVC	Cd-003	IH06-1B5PO-VWK	6020167
			Connector M8, 3-pin	Cd-004	IH06-1B5PO-VTK	6020171

8014939/2016-08-29

Subject to change without notice

Dimensional drawings (Dimensions in mm (inch))

IM04, flush, cable

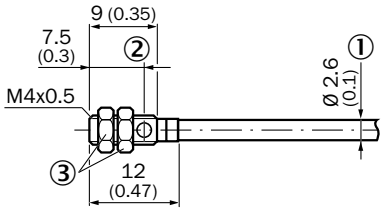

① Connection
② Indication LED
③ Fastening nuts (2 x); 6 mm hex, stainless steel

IM04, flush, cable with connector

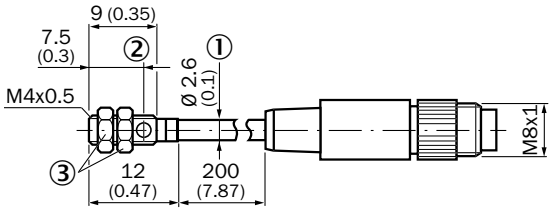

① Connection
② Indication LED
③ Fastening nuts (2 x); 6 mm hex, stainless steel

IH03, flush, cable

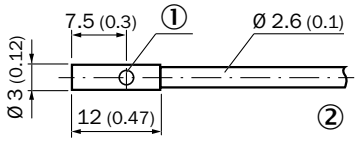

① Indication LED
② Connection

IH03, flush, cable with connector

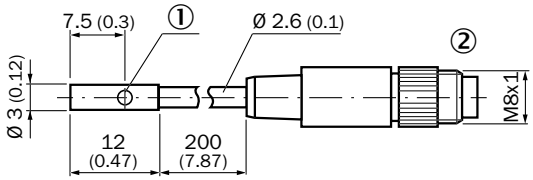

① Indication LED
② Connection

IHP03, flush, cable

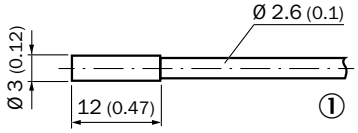

① Connection

IH06, flush, cable

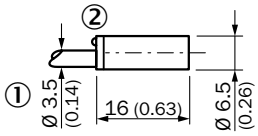

① Connection
② Indication LED

IH06, flush, with connector

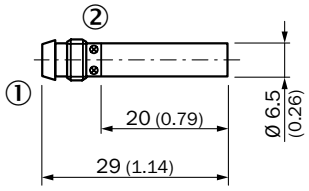

① Connection
② Indication LED

Connection diagram

Cd-001

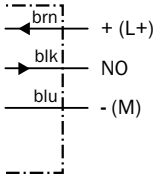

Cd-002

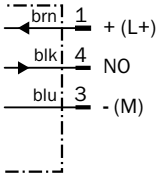

Cd-003

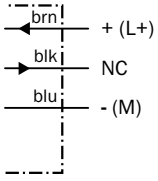

Cd-004

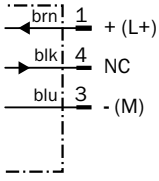

C

Response diagram

IM04-01Bxxxxxx

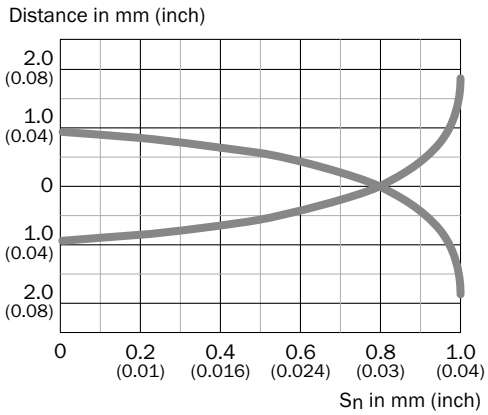

IH03-01Bxxxxxx

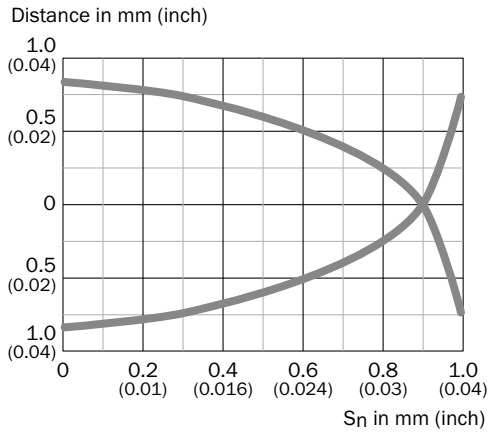

IHP03-0B8xxxxxx

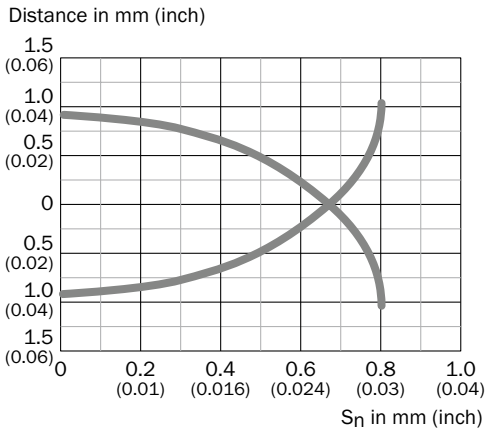

Installation note

Quasi-flush installation

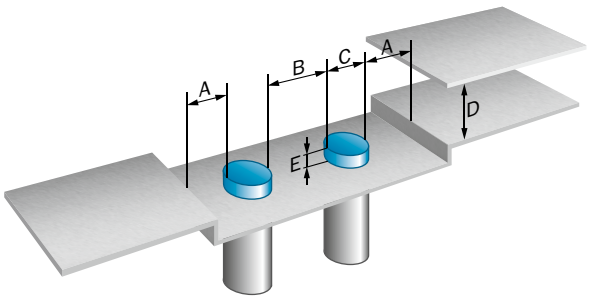

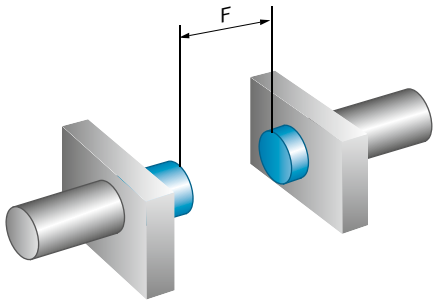

	Installation type	Sensing range Sn	A	B	C	D	E	F
IM04	Flush	1 mm	1 mm	2 mm	3 mm	3 mm	0 mm	8 mm
IH03	Flush	1 mm	1 mm	2 mm	3 mm	3 mm	0 mm	8 mm
IHP03	Flush	0.8 mm	1 mm	2 mm	3 mm	3 mm	0 mm	7 mm
IH06 ultra short	Flush	1.5 mm	1.75 mm	3 mm	6.5 mm	4.5 mm	0 mm	12 mm

Accessories

Figure	Accessory	Page
	Plug connectors and cables	➜ H-267
	Mounting systems	➜ H-258
	Further accessories	➜ H-280

C

MINIATURE SENSORS FOR INDUSTRIAL APPLICATIONS

C

Product description

The inductive proximity sensors in the IMM product family stand out from the crowd thanks to their low spatial requirements and high reliability. Their state-of-the-art ASIC technology offers miniaturization without compromise. And with maximum performance, sensing ranges of up to 4 mm, integrated electronics, suppressors, and output state LEDs, they offer everything you could possibly want. Their small size and low weight make these inductive miniature sensors ideal for performing highly dynamic pick-and-place applications, integrating into compact assemblies, and monitoring faster handling and mounting processes. Thanks to the IO-Link communication, the sensors are also ideally equipped for future requirements.

At a glance

- Design: M4 to M5, diameter from 3 mm to 6.5 mm
- Extended sensing ranges: 0.6 mm to 4 mm
- Electrical configuration: DC 3-wire
- Enclosure rating: IP 67
- Temperature range: –25 °C to +70 °C
- Rugged stainless-steel housing; plastic sensing face
- IO-Link ready
- Extremely compact, lightweight, and space-saving

Your benefits

- Easy installation in applications with limited available space
- Reliable detection of fast handling and mounting processes
- High positioning accuracy and precise switching behavior
- Great freedom with respect to machine design
- The low weight of the sensor enables fast acceleration in dynamic handling processes
- IO-Link provides easy data access from the PLC
- Simple sensor diagnostics, device change, and identification through IO-Link

Additional information

Detailed technical data C-41
Ordering information C-42
Dimensional drawings C-44
Connection diagram. C-46
Installation note C-47
Accessories. C-47

➜ www.sick.com/IMM

For more information, simply enter the link or scan the QR code and get direct access to technical data, CAD design models, operating instructions, software, application examples, and much more.

8014939/2016-08-29
Subject to change without notice

Detailed technical data

Features

	IH03	IM04	IH04	IM05 Sn= 0.8 mm	IM05 Sn= 1.5 mm	IH06
Housing	Cylindrical smooth housing	Cylindrical thread design	Cylindrical smooth housing	Cylindrical thread design		Cylindrical smooth housing
Thread size	–	M4 x 0.5	–	M5 x 0.5		–
Diameter	Ø 3 mm	–	Ø 4 mm	–		Ø 6.5 mm
Sensing range S_n						
Flush	0.6 mm		0.8 mm	0.8 mm	1.5 mm	2 mm
Non-flush	–					4 mm
Switching frequency	5,000 Hz			5,000 Hz / 3,000 Hz		1,800 Hz - 5,000 Hz
Output type	NPN / PNP (depending on type)					
Output function	NO / NC (depending on type)					
Electrical wiring	DC 3-wire					
Enclosure rating [2]	IP 67					

[1] Do not bend below 0 °C.
[2] According to EN 60529.

Mechanics/electronics

	IH03	IM04	IH04	IM05 Sn= 0.8 mm	IM05 Sn= 1.5 mm	IH06
Supply voltage	10 V DC ... 30 V DC					
Ripple [1]	≤ 20 %					≤ 10 %
Voltage drop	≤ 2 V [2]		≤ 2 V [3]			
Current consumption [4]	≤ 10 mA					
Time delay before availability	≤ 10 ms					≤ 50 ms
Hysteresis	1 % ... 10 %					1 % ... 20 %
Repeatability	≤ 2 % [5]		≤ 1.5 % [5]		≤ 2 % [5]	≤ 5 % [5] [6]
Temperature drift (of S_r)	± 10 %					
EMC	EN 60947-5-2 IEC 61000-4-2: (Testlevel 2) IEC 61000-4-4: (Testlevel 2)			EN 60947-5-2 IEC 61000-4-2: (Testlevel 2) IEC 61000-4-4: (Testlevel 2)	EN 60947-5-2 IEC 61000-4-2: (Testlevel 2) IEC 61000-4-4: (Testlevel 3)	EN 60947-5-2 IEC 61000-4-2: (Testlevel 2) IEC 61000-4-4: (Testlevel 3)
Continuous current I_a	≤ 100 mA		≤ 200 mA	–		≤ 200 mA
Connection type	Cable, 2 m, PUR [7] Cable with connector and knurled nuts, M8, 0.2 m, PUR [7] (depending on type)		Cable, 2 m, PVC Male connector, M8 Cable with male connector, M8, 0.2 m, PVC (depending on type)	Male connector, M8 Cable, 2 m, PVC Cable, 2 m, PUR (depending on type)		Cable, 2 m, PVC Male connector, M8 (depending on type)
Short-circuit protection	✔					

C

	IH03	IM04	IH04	IM05 Sn= 0.8 mm	IM05 Sn= 1.5 mm	IH06
Reverse polarity protection	✔					
Power-up pulse protection	–					✔
Shock and vibration resistance	30 g, 11 ms / 10 ... 55 Hz, 1 mm					
Ambient operating temperature	–25 °C ... +70 °C					
Housing material	Stainless steel (V2A, 304)					
Sensing face material	Plastic, POM		Plastic, PA66			Plastic, PBT
Tightening torque, max.	–	≤ 0.8 Nm	–	1.5 Nm	1.8 Nm	

[1] Of V_S.
[2] With Ia = 100 mA.
[3] With Ia = 200 mA.
[4] Without load.
[5] Ub = 20 V DC ... 30 V DC, Ta = 23 °C ± 5 °C.
[6] Of Sr.
[7] Do not bend below 0 °C.

C

Reduction factors

	IH03	IM04	IH04	IM05 Sn= 0.8 mm	IM05 Sn= 1.5 mm	IH06
Note	The values are reference values which may vary					
Stainless steel (V2A, 304)						
Flush	Approx. 0.8				Approx. 0.75	Approx. 0.6
Non-flush	–					Approx. 0.77
Aluminum (Al)						
Flush	Approx. 0.55		Approx. 0.5		Approx. 0.4	Approx. 0.17
Non-flush	–					Approx. 0.47
Copper (Cu)						
Flush	Approx. 0.5		Approx. 0.45		Approx. 0.4	Approx. 0.1
Non-flush	–					Approx. 0.42
Brass (Br)						
Flush	Approx. 0.65		Approx. 0.55		Approx. 0.5	Approx. 0.25
Non-flush	–					Approx. 0.52

Ordering information

Other models ➔ www.sick.com/IMM

IH03

- **Installation type:** Flush
- **Switching frequency:** 5,000 Hz

Sensing range S_n	Output function	Output type	Connection	Connection diagram	Type	Part no.
0.6 mm	NO	NPN	Cable, 3-wire, 2 m, PUR	Cd-001	IH03-0B6NS-VU1	6020142
		PNP	Cable, 3-wire, 2 m, PUR	Cd-001	IH03-0B6PS-VU1	6020141
			Cable with connector M8, 3-pin, with knurled nuts, 0.2 m, PUR	Cd-002	IH03-0B6PS-VR1	6038602
	NC	PNP	Cable, 3-wire, 2 m, PUR	Cd-003	IH03-0B6PO-VU1	6020143

8014939/2016-08-29
Subject to change without notice

IM04

- **Installation type:** Flush
- **Switching frequency:** 5,000 Hz

Sensing range S_n	Output function	Output type	Connection	Connection diagram	Type	Part no.
0.6 mm	NO	PNP	Cable, 3-wire, 2 m, PUR	Cd-001	IM04-0B6PS-ZU1	6020145
			Cable with connector M8, 3-pin, with knurled nuts, 0.2 m, PUR	Cd-002	IM04-0B6PS-ZR1	6042085
		NPN	Cable, 3-wire, 2 m, PUR	Cd-001	IM04-0B6NS-ZU1	6020146
	NC	PNP	Cable, 3-wire, 2 m, PUR	Cd-003	IM04-0B6PO-ZU1	6020147

IH04

- **Installation type:** Flush
- **Switching frequency:** 5,000 Hz

Sensing range S_n	Output function	Output type	Connection	Connection diagram	Type	Part no.
0.8 mm	NO	NPN	Cable, 3-wire, 2 m, PVC	Cd-001	IH04-0B8NS-VW1	6020149
			Connector M8, 3-pin	Cd-002	IH04-0B8NS-VT1	6020152
		PNP	Cable, 3-wire, 2 m, PVC	Cd-001	IH04-0B8PS-VW1	6020113
			Connector M8, 3-pin	Cd-002	IH04-0B8PS-VT1	6020114
			Cable with connector M8, 3-pin, 0.2 m, PVC	Cd-002	IH04-0B8PS-VR1	6045178

IM05

- **Installation type:** Flush

Sensing range S_n	Switching frequency	Output function	Output type	Connection	Connection diagram	Type	Part no.
0.8 mm	5,000 Hz	NO	PNP	Connector M8, 3-pin	Cd-002	IM05-0B8PS-ZT1	6020110
				Cable, 3-wire, 2 m, PVC	Cd-001	IM05-0B8PS-ZW1	6011591
			NPN	Connector M8, 3-pin	Cd-002	IM05-0B8NS-ZT1	6020158
				Cable, 3-wire, 2 m, PVC	Cd-001	IM05-0B8NS-ZW1	6020155
		NC	PNP	Connector M8, 3-pin	Cd-004	IM05-0B8PO-ZT1	6020159
			NPN	Cable, 3-wire, 2 m, PVC	Cd-003	IM05-0B8NO-ZW1	6020157
1.5 mm	3,000 Hz	NO	PNP	Connector M8, 3-pin	Cd-002	IM05-1B5PSVT0S	6049739
				Cable, 3-wire, 2 m, PUR	Cd-001	IM05-1B5PSVU2S	6049735
			NPN	Connector M8, 3-pin	Cd-002	IM05-1B5NSVT0S	6049737
				Cable, 3-wire, 2 m, PUR	Cd-001	IM05-1B5NSVU2S	6049733
		NC	PNP	Connector M8, 3-pin	Cd-004	IM05-1B5POVT0S	6049740
				Cable, 3-wire, 2 m, PUR	Cd-003	IM05-1B5POVU2S	6049736
			NPN	Connector M8, 3-pin	Cd-004	IM05-1B5NOVT0S	6049738
				Cable, 3-wire, 2 m, PUR	Cd-003	IM05-1B5NOVU2S	6049734

C

IH06

Installation type	Sensing range S_n	Switching frequency	Housing	Output function	Output type	Connection	Connection diagram	Type	Part no.
Flush	2 mm	3,000 Hz	Short-body	NO	NPN	Cable, 3-wire, 2 m, PVC	Cd-001	IH06-02BNS-VWK	6025875
						Connector M8, 3-pin	Cd-002	IH06-02BNS-VTK	6025878
					PNP	Cable, 3-wire, 2 m, PVC	Cd-001	IH06-02BPS-VWK	6025874
						Connector M8, 3-pin	Cd-002	IH06-02BPS-VTK	6025877
				NC	PNP	Connector M8, 3-pin	Cd-004	IH06-02BPO-VTK	6025879
Non-flush	4 mm	2,500 Hz	Short-body	NO	NPN	Cable, 3-wire, 2 m, PVC	Cd-001	IH06-04NNS-VWK	6025881
						Connector M8, 3-pin	Cd-002	IH06-04NNS-VTK	6025883
					PNP	Cable, 3-wire, 2 m, PVC	Cd-001	IH06-04NPS-VWK	6025880
						Connector M8, 3-pin	Cd-002	IH06-04NPS-VTK	6025882
				NC	PNP	Connector M8, 3-pin	Cd-004	IH06-04NPO-VTK	6025884
Flush	2 mm	5,000 Hz	Standard design	NO	NPN	Cable, 3-wire, 2 m, PVC	Cd-001	IH06-02BNS-VW1	7900178
						Connector M8, 3-pin	Cd-002	IH06-02BNS-VT1	7900180
					PNP	Cable, 3-wire, 2 m, PVC	Cd-001	IH06-02BPS-VW1	7900177
						Connector M8, 3-pin	Cd-002	IH06-02BPS-VT1	7900179
				NC	PNP	Connector M8, 3-pin	Cd-004	IH06-02BPO-VT1	1016857
Non-flush	4 mm	1,800 Hz	Standard design	NO	NPN	Cable, 3-wire, 2 m, PVC	Cd-001	IH06-04NNS-VW1	7900182
					PNP	Cable, 3-wire, 2 m, PVC	Cd-001	IH06-04NPS-VW1	7900181
						Connector M8, 3-pin	Cd-002	IH06-04NPS-VT1	7900183

Dimensional drawings (Dimensions in mm (inch))

IH03, standard-body, flush, cable

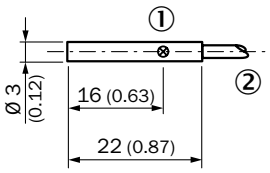

① Indication LED
② Connection

IH 03, standard-body, non-flush, cable with connector, with knurled nuts

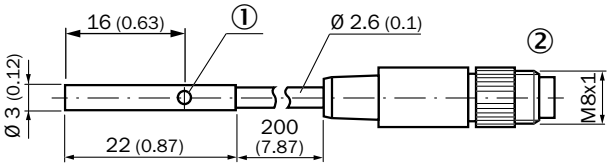

① Indication LED
② Connection

IM04, standard-body, flush, cable

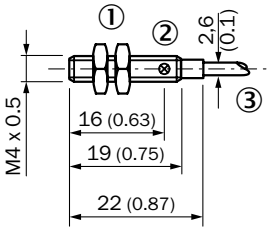

① Fastening nuts (2 x); 6 mm hex, stainless steel
② Indication LED
③ Connection

IM04, standard-body, non-flush, cable with connector with knurled nuts

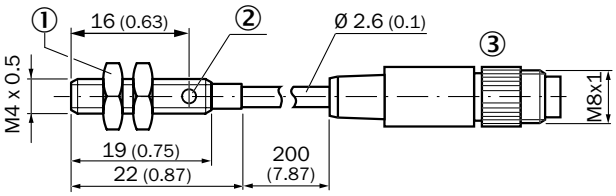

① Fastening nuts (2 x); 6 mm hex, stainless steel
② Indication LED
③ Connection

IH04, standard-body, flush, cable

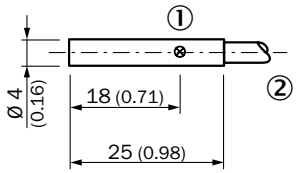

① Connection
② Indication LED

IH04, standard-body, flush, connector

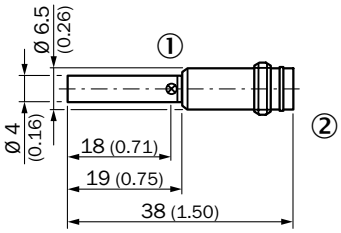

① Connection
② Indication LED

IH04, standard-body, non-flush, cable with connector, with knurled nuts

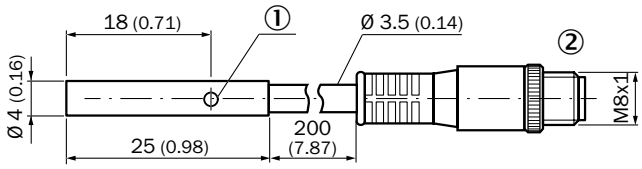

① Indication LED
② Connection

IM05, standard-body, flush, connector

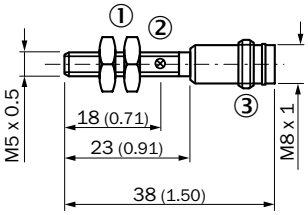

① Connection
② Indication LED
③ Fastening nuts (2 x); 7 mm hex, stainless steel

IM05, standard-body, flush, cable

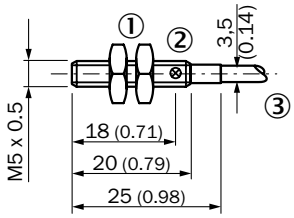

① Connection
② Indication LED
③ Fastening nuts (2 x); 7 mm hex, stainless steel

IH06, short-body, flush, cable

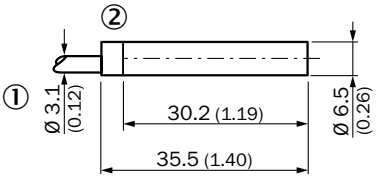

① Connection
② Indication LED

IH06, short-body, flush, connector

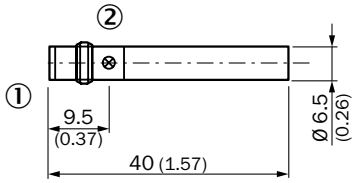

① Connection
② Indication LED

IH06, short-body, non-flush, cable

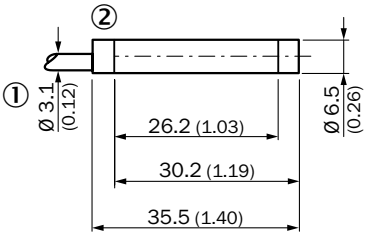

① Connection
② Indication LED

IH06, short-body, non-flush, connector

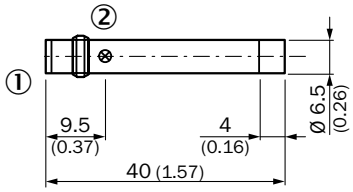

① Connection
② Indication LED

IH06, standard-body, flush, cable

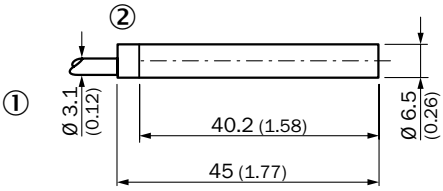

① Connection
② Indication LED

IH06, standard-body, flush, connector

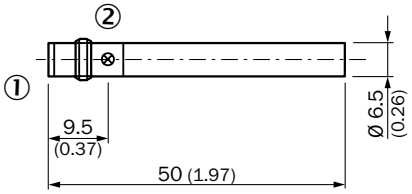

① Connection
② Indication LED

IH06, standard-body, non-flush, cable

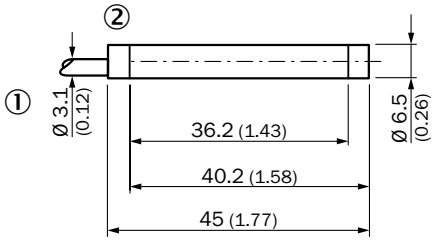

① Connection
② Indication LED

IH06, standard-body, non-flush, connector

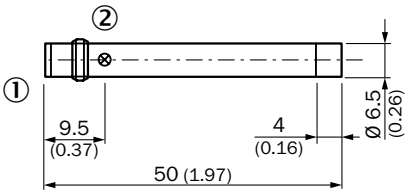

① Connection
② Indication LED

C

Connection diagram

Cd-001

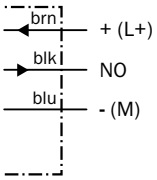

Cd-002

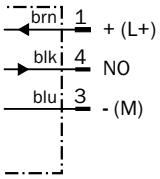

Cd-003

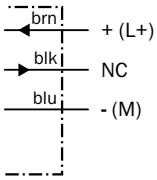

Cd-004

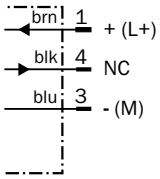

Installation note

Flush / Non-flush installation

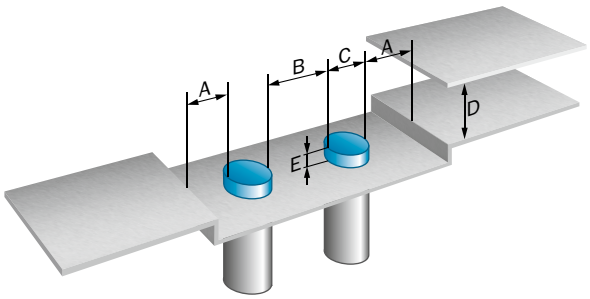

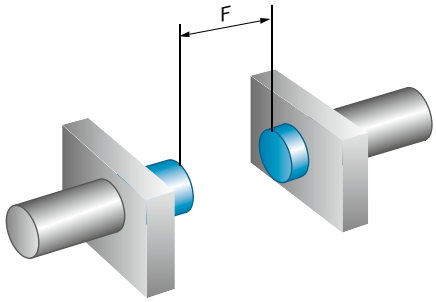

	Installation type	Sensing range Sn	A	B	C	D	E	F
IH03 standard body	Flush	0.6 mm	0.5 mm	0 mm	3 mm	1.8 mm	0 mm	5 mm
IM04 standard body	Flush	0.6 mm	0 mm	0 mm	4 mm	1.8 mm	0 mm	5 mm
IH04 standard body	Flush	0.8 mm	0 mm	0 mm	4 mm	2.4 mm	0 mm	7 mm
IM05-0B8xxxx	Flush	0.8 mm	0.8 mm	0 mm	5 mm	2.4 mm	0 mm	7 mm
IM05-1B5xxxx	Flush	1.5 mm	1.5 mm	0 mm	5 mm	4.5 mm	0 mm	12 mm
IH06 short body	Flush	2 mm	3.25 mm	6.5 mm	6.5 mm	6 mm	4 mm	16 mm
IH06 short body	Non flush	4 mm	6.5 mm	13 mm	6.5 mm	12 mm	6 mm	32 mm
IH06 standard body	Flush	2 mm	3.25 mm	6.5 mm	6.5 mm	6 mm	4 mm	16 mm
IH06 standard body	Non flush	4 mm	6.5 mm	13 mm	6.5 mm	12 mm	6 mm	32 mm

C

Accessories

Figure	Accessory	Page
	Plug connectors and cables	➜ H-267
	Mounting systems	➜ H-258
	Further accessories	➜ H-280

THE ECONOMIC STANDARD FOR USE IN INDUSTRIAL ENVIRONMENTS

C

Product description

SICK's inductive sensors offer precise detection, less downtime and a long service life. The inductive IME sensors pack high technology into the smallest of spaces. The integrated ASIC chip enables digital adjustment after the end of the manufacturing process. The saving of values in the ASIC ensures highly precise switching points and very high repeatability of values – for any number of production runs. IM sensors are completely encapsulated with hotmelt molding, which greatly increases shock and vibration resistance. The customer benefits from high positioning accuracy in the machine and long-term reliability.

At a glance

- Types: M8 to M30
- Extended sensing ranges: 1.5 mm to 38 mm
- Electrical configuration: DC 2-wire
- Enclosure rating: IP 67
- Temperature range: –25 °C to +75 °C
- Nickel-plated brass housing; plastic sensing face

Your benefits

- High machine availability thanks to rugged design
- Highly cost-efficient thanks to low purchase costs
- Wide selection available thanks to extensive standard portfolio
- High positioning accuracy thanks to precise switching behavior

Additional information

Detailed technical data C-49
Ordering information C-50
Dimensional drawings C-51
Connection diagram. C-54
Installation note C-54
Accessories. C-55

➜ www.sick.com/IME

For more information, simply enter the link or scan the QR code and get direct access to technical data, CAD design models, operating instructions, software, application examples, and much more.

8014939/2016-08-29
Subject to change without notice

Detailed technical data

Features

	IME08	IME12	IME18	IME30
Housing	Cylindrical thread design			
Thread size	M8 x 1	M12 x 1	M18 x 1	M30 x 1.5
Sensing range S_n				
Flush	2 mm	4 mm	8 mm	15 mm
Non-flush	4 mm	8 mm	12 mm	20 mm
Installation type	Flush / non-flush (depending on type)			
Switching frequency	4,000 Hz	2,000 Hz	1,000 Hz	500 Hz
Output function	NC / NO (depending on type)			
Electrical wiring	DC 2-wire			
Enclosure rating [1]	IP 67			

[1] According to EN 60529.

C

Mechanics/electronics

	IME08	IME12	IME18	IME30
Supply voltage	10 V DC ... 30 V DC			
Ripple	≤ 10 %			
Voltage drop	≤ 4 V [1] / ≤ 4.5 V [2]			
Time delay before availability	≤ 100 ms			
Hysteresis	5 % ... 15 %			3 % ... 15 % (depending on type)
Repeatability [3] [4]	≤ 2 %			
Temperature drift (of S_r)	± 10 %			
EMC	According to EN 60947-5-2			
Continuous current I_a	≤ 100 mA			
Off-state current	≤ 0.8 mA			
Load resistance, min.	≥ 3 mA			
Connection type	Cable, 2 m, PVC Male connector, M8 (depending on type)	Cable, 2 m, PVC Male connector, M12 Cable with male connector, M12, 0.3 m, PVC (depending on type)		Cable, 2 m, PVC Male connector, M12 (depending on type)
Short-circuit protection	✔			
Reverse polarity protection	✔			
Power-up pulse	≤ 5 ms			
Shock and vibration resistance	30 g, 11 ms/10 Hz ... 55 Hz, 1 mm			
Ambient operating temperature	–25 °C ... +75 °C			
Housing material	Nickel-plated brass			
Sensing face material	Plastic, PA6			
Tightening torque, max.	Typ. 5 Nm	Typ. 12 Nm	≤ 40 Nm	≤ 100 Nm

[1] At I_a = 30 mA.
[2] At I_a max.
[3] Ub and Ta constant.
[4] Of Sr.

Reduction factors

Note	The values are reference values which may vary
St37 steel (Fe)	1
Stainless steel (V2A, 304)	Approx. 0.8
Aluminum (Al)	Approx. 0.45
Copper (Cu)	Approx. 0.4
Brass (Br)	Approx. 0.4

Ordering information

Other models ➜ www.sick.com/IME

C

IME08

Sensing range S_n	Installation type	Housing	Connection	Output function	Connection diagram	Type	Part no.
2 mm	Flush	Standard	Cable, 2-wire, 2 m, PVC	NC	Cd-012	IME08-02BDOZY2S	1068250
				NO	Cd-012	IME08-02BDSZY2S	1068251
			Connector M8, 3-pin	NC	Cd-246	IME08-02BDOZT0S	1067108
				NO	Cd-241	IME08-02BDSZT0S	1067109
		Short-body	Cable, 2-wire, 2 m, PVC	NO	Cd-012	IME08-02BDSZY2K	1070432
4 mm	Non-flush	Standard	Cable, 2-wire, 2 m, PVC	NC	Cd-012	IME08-04NDOZY2S	1068252
				NO	Cd-012	IME08-04NDSZY2S	1068253
			Connector M8, 3-pin	NC	Cd-246	IME08-04NDOZT0S	1067197
				NO	Cd-241	IME08-04NDSZT0S	1067177

IME12

Sensing range S_n	Installation type	Housing	Connection	Output function	Connection diagram	Type	Part no.
4 mm	Flush	Standard	Cable, 2-wire, 2 m, PVC	NC	Cd-012	IME12-04BDOZY2S	1068254
				NO	Cd-012	IME12-04BDSZY2S	1068255
			Male connector M12, 4-pin	NC	Cd-245	IME12-04BDOZC0S	1067200
				NO	Cd-015	IME12-04BDSZC0S	1067178
			Cable with M12 male connector, 0.3 m, PVC	NO	Cd-015	IME12-04BDSZQ9S	1068718
		Short-body	Cable, 2-wire, 2 m, PVC	NO	Cd-012	IME12-04BDSZY2K	1072274
8 mm	Non-flush	Standard	Cable, 2-wire, 2 m, PVC	NC	Cd-012	IME12-08NDOZY2S	1068256
				NO	Cd-012	IME12-08NDSZY2S	1068257
			Male connector M12, 4-pin	NC	Cd-245	IME12-08NDOZC0S	1067203
				NO	Cd-015	IME12-08NDSZC0S	1067180

IME18

Sensing range S_n	Installation type	Housing	Connection	Output function	Connection diagram	Type	Part no.
8 mm	Flush	Standard	Cable, 2-wire, 2 m, PVC	NC	Cd-012	IME18-08BDOZY2S	1068258
				NO	Cd-012	IME18-08BDSZY2S	1068259
			Male connector M12, 4-pin	NC	Cd-245	IME18-08BDOZC0S	1067206
				NO	Cd-015	IME18-08BDSZC0S	1067207
			Cable with M12 male connector, 0.3 m, PVC	NO	Cd-015	IME18-08BDSZQ9S	1068719
		Short-body	Cable, 2-wire, 2 m, PVC	NO	Cd-012	IME18-08BDSZY2K	1072277
12 mm	Non-flush	Standard	Cable, 2-wire, 2 m, PVC	NC	Cd-012	IME18-12NDOZY2S	1068260
				NO	Cd-012	IME18-12NDSZY2S	1068261
			Male connector M12, 4-pin	NC	Cd-245	IME18-12NDOZC0S	1067222
				NO	Cd-015	IME18-12NDSZC0S	1067181

C

IME30

Sensing range S_n	Installation type	Housing	Connection	Output function	Connection diagram	Type	Part no.
15 mm	Flush	Standard	Cable, 2-wire, 2 m, PVC	NC	Cd-012	IME30-15BDOZY2S	1068263
				NO	Cd-012	IME30-15BDSZY2S	1068264
			Male connector M12, 4-pin	NC	Cd-245	IME30-15BDOZC0S	1067226
				NO	Cd-015	IME30-15BDSZC0S	1067183
20 mm	Non-flush	Standard	Cable, 2-wire, 2 m, PVC	NC	Cd-012	IME30-20NDOZY2S	1068266
				NO	Cd-012	IME30-20NDSZY2S	1068267
			Male connector M12, 4-pin	NC	Cd-245	IME30-20NDOZC0S	1067235
				NO	Cd-015	IME30-20NDSZC0S	1067184
15 mm	Flush	Short-body	Cable, 2-wire, 2 m, PVC	NO	Cd-012	IME30-15BDSZY2K	1072343

Dimensional drawings (Dimensions in mm (inch))

IME08 Standard, cable, flush

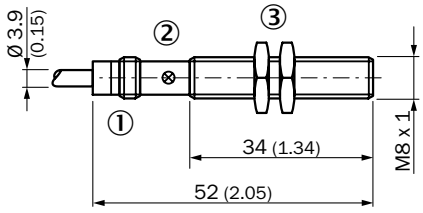

① Connection
② Indication LED
③ Fastening nuts (2x); width across 13, metal

IME08 Standard, connector, flush

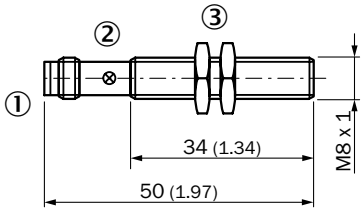

① Connection
② Indication LED
③ Fastening nuts (2x); width across 13, metal

C

IME08 Standard, cable, non-flush

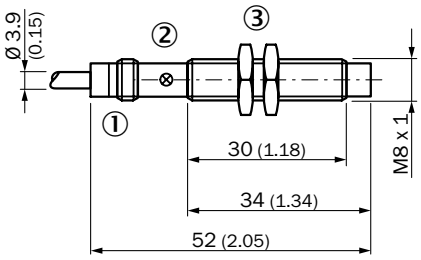

① Connection
② Indication LED
③ Fastening nuts (2x); width across 13, metal

IME08 Short-body housing, cable, flush

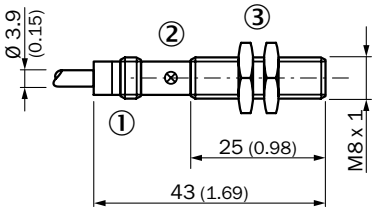

① Connection
② Indication LED
③ Fastening nuts (2x); width across 13, metal

IME12 Standard, connector, flush

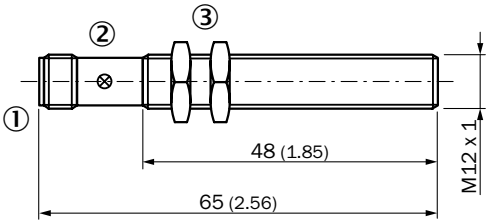

① Connection
② Indication LED
③ Fastening nuts (2x); width across 17, metal

IME12 Standard, connector, non-flush

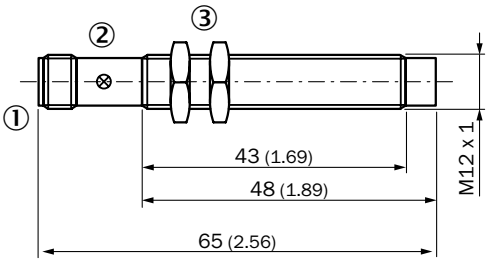

① Connection
② Indication LED
③ Fastening nuts (2x); width across 17, metal

IME08 standard, male connector, non-flush

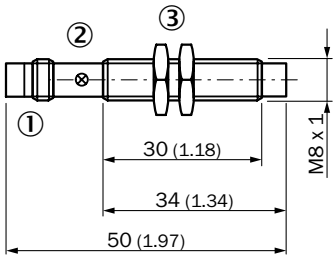

① Connection
② Indication LED
③ Fastening nuts (2x); width across 13, metal

IME12 standard, cable, flush

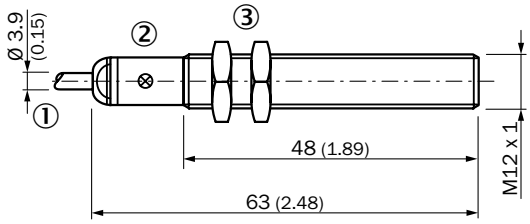

① Connection
② Indication LED
③ Fastening nuts (2x); width across 17, metal

IME12 standard, cable, non-flush

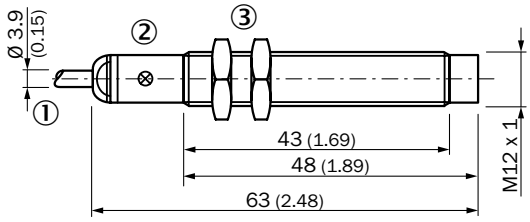

① Connection
② Indication LED
③ Fastening nuts (2x); width across 17, metal

IME12 short-body, cable, flush

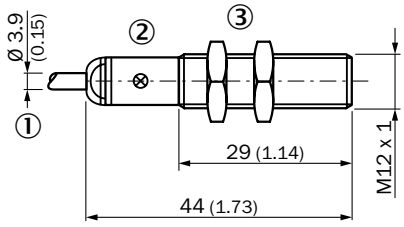

① Connection
② Indication LED
③ Fastening nuts (2x); width across 17, metal

C

IME18 standard, cable, flush

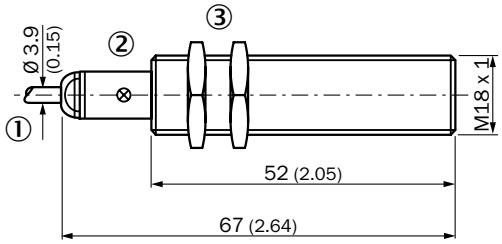

① Connection
② Indication LED
③ Fastening nuts (2x); width across 24, metal

IME18 Standard, connector, flush

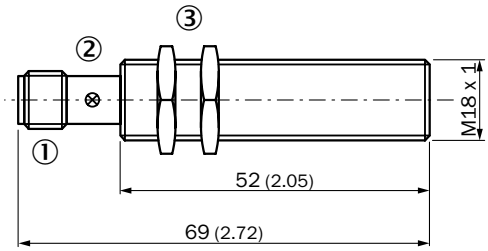

① Connection
② Indication LED
③ Fastening nuts (2x); width across 24, metal

IME18 Standard, cable, non-flush

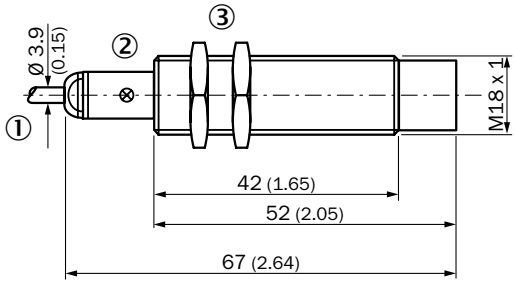

① Connection
② Indication LED
③ Fastening nuts (2x); width across 24, metal

IME18 Standard, connector, non-flush

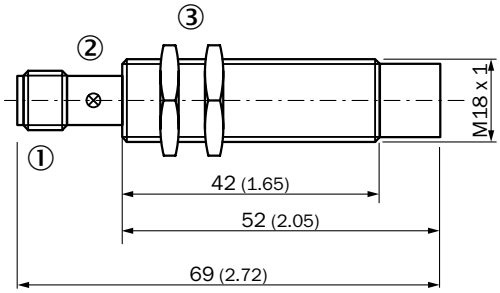

① Connection
② Indication LED
③ Fastening nuts (2x); width across 24, metal

IME18 Short-body housing, cable, flush

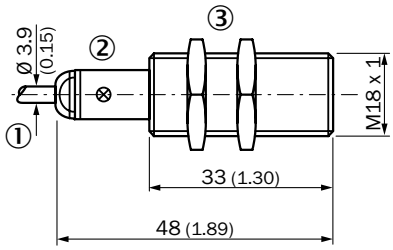

① Connection
② Indication LED
③ Fastening nuts (2x); width across 24, metal

IME30 Standard, cable, flush

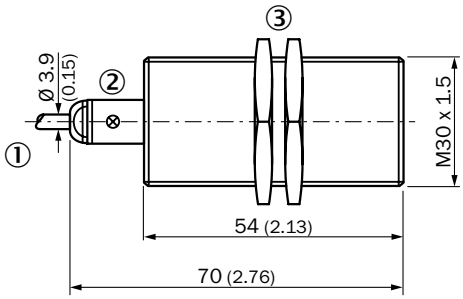

① Connection
② Indication LED
③ Fastening nuts (2x); width across 36, metal

IME30 Standard, connector, flush

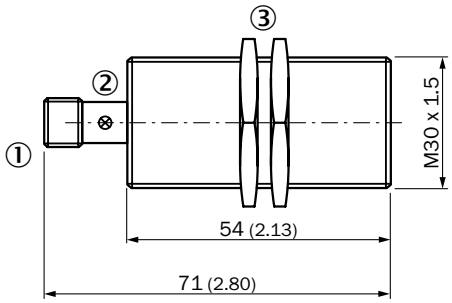

① Connection
② Indication LED
③ Fastening nuts (2x); width across 36, metal

IME30 Standard, cable, non-flush

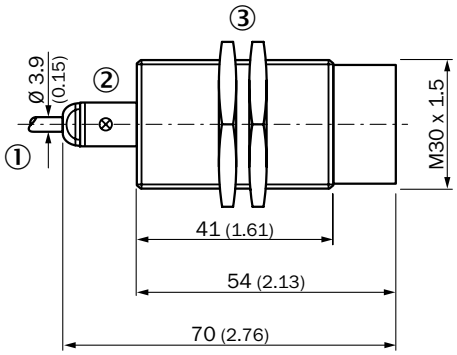

① Connection
② Indication LED
③ Fastening nuts (2x); width across 36, metal

IME30 Standard, connector, non-flush

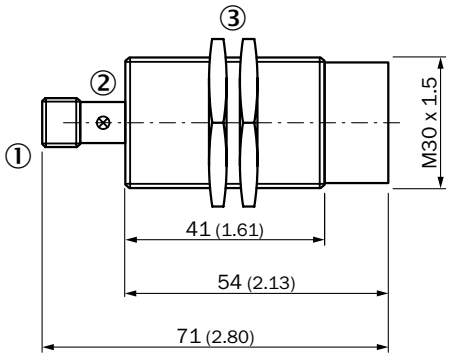

① Connection
② Indication LED
③ Fastening nuts (2x); width across 36, metal

IME30 Short-body housing, cable, flush

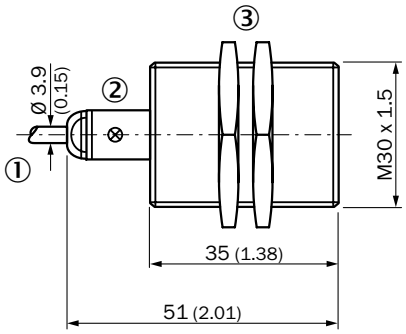

① Connection
② Indication LED
③ Fastening nuts (2x); width across 36, metal

C

Connection diagram

Cd-012

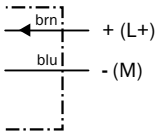

Cd-015

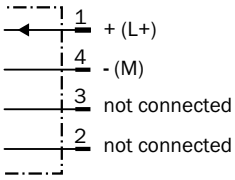

Cd-241

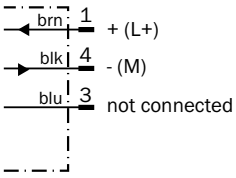

Cd-245

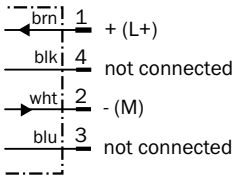

Cd-246

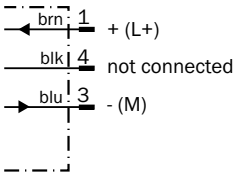

Installation note

Flush installation

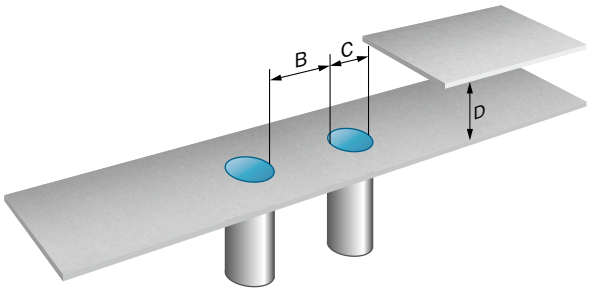

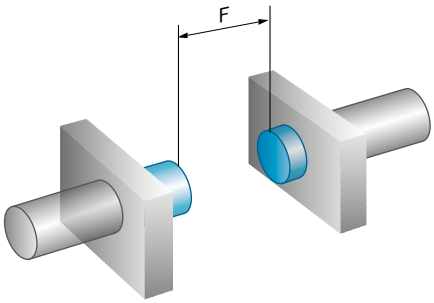

Non-flush installation

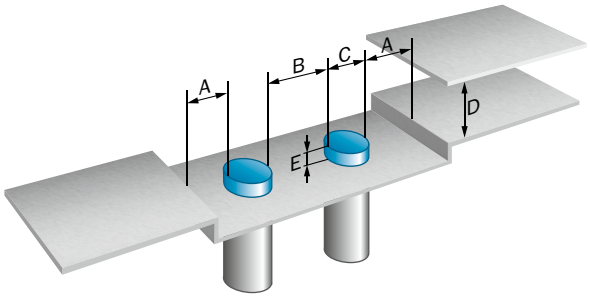

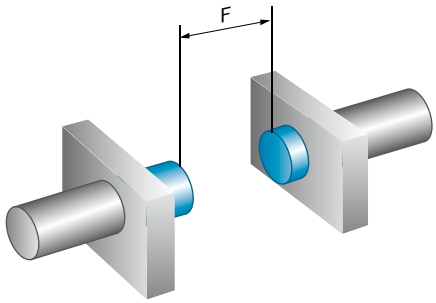

	Sensing range Sn	Installation type	A	B	C	D	E	F
IME08-02Bxxxxxx	2 mm	Flush	-	16 mm	8 mm	6 mm	-	16 mm
IME08-04Nxxxxxx	4 mm	Non-flush	8 mm	18 mm	8 mm	12 mm	8 mm	32 mm
IME12-04Bxxxxxx	4 mm	Flush	-	24 mm	12 mm	12 mm	-	32 mm
IME12-08Nxxxxxx	8 mm	Non-flush	12 mm	24 mm	12 mm	24 mm	16 mm	64 mm
IME18-08Bxxxxxx	8 mm	Flush	-	36 mm	18 mm	24 mm	-	64 mm
IME18-12Nxxxxxx	12 mm	Non-flush	18 mm	36 mm	18 mm	36 mm	24 mm	96 mm
IME30-15Bxxxxxx	15 mm	Flush	-	60 mm	30 mm	45 mm	-	120 mm
IME30-20Nxxxxxx	20 mm	Non-flush	30 mm	60 mm	30 mm	60 mm	40 mm	160 mm

C

Accessories

Figure	Accessory	Page
	Plug connectors and cables	➜ H-267
	Mounting systems	➜ H-258
	Further accessories	➜ H-280

THE ECONOMIC STANDARD FOR USE IN INDUSTRIAL ENVIRONMENTS

C

Product description

SICK's inductive sensors offer precise detection, less downtime and a long service life. The inductive IME sensors pack high technology into the smallest of spaces. The integrated ASIC chip enables digital adjustment after the end of the manufacturing process. The saving of values in the ASIC ensures highly precise switching points and very high repeatability of values – for any number of production runs. IM sensors are completely encapsulated with hotmelt molding, which greatly increases shock and vibration resistance. The customer benefits from high positioning accuracy in the machine and long-term reliability.

At a glance

- Types: M8 to M30
- Extended sensing ranges: 1.5 mm to 38 mm
- Electrical configuration: DC 3-wire
- Enclosure rating: IP 67
- Temperature range: –25 °C to +75 °C
- Nickel-plated brass housing; plastic sensing face

Your benefits

- High machine availability thanks to rugged design
- Highly cost-efficient thanks to low purchase costs
- Wide selection available thanks to extensive standard portfolio
- High positioning accuracy thanks to precise switching behavior

Additional information

Detailed technical data C-57
Ordering information C-58
Dimensional drawings C-69
Connection diagram C-74
Installation note C-74
Accessories C-75

➜ www.sick.com/IME

For more information, simply enter the link or scan the QR code and get direct access to technical data, CAD design models, operating instructions, software, application examples, and much more.

8014939/2016-08-29
Subject to change without notice

Detailed technical data

Features

		IME08	IME12	IME18	IME30
Housing		Cylindrical thread design			
Thread size		M8 x 1	M12 x 1	M18 x 1	M30 x 1.5
Sensing range S_n					
Standard sensing range	Flush	1.5 mm	2 mm	5 mm	10 mm
	Non-flush	2.5 mm	4 mm	8 mm	15 mm
Extended sensing range	Flush	2 mm	4 mm	8 mm	15 mm
	Non-flush	4 mm	8 mm	12 mm	20 mm
Triple sensing range	Flush	4 mm	6 mm	12 mm	20 mm
	Non-flush	3 mm	10 mm	20 mm	38 mm
Installation type		Flush / Non-flush / Quasi-flush (depending on type)			
Switching frequency					
Standard sensing range	Flush	4,000 Hz	2,000 Hz	1,000 Hz	500 Hz
	Non-flush	4,000 Hz	2,000 Hz	1,000 Hz	500 Hz
Extended sensing range	Flush	4,000 Hz	2,000 Hz	1,000 Hz	500 Hz
	Non-flush	4,000 Hz	2,000 Hz	1,000 Hz	500 Hz
Triple sensing range	Flush	1,000 Hz	800 Hz	500 Hz	200 Hz
	Non-flush	500 Hz	400 Hz	200 Hz	100 Hz
Output type		NPN / PNP (depending on type)			
Output function		NC / NO (depending on type)			
Electrical wiring		DC 3-wire (depending on type, complementary types upon request)			
Enclosure rating [1]		IP 67			

[1] According to EN 60529.

Mechanics/electronics

	IME08	IME12	IME18	IME30
Supply voltage	10 V DC ... 30 V DC			
Ripple	≤ 10 %			
Voltage drop [1]	≤ 2 V			
Current consumption [2]	≤ 10 mA			
Time delay before availability				
Standard sensing range	≤ 100 ms			≤ 200 ms
Extended sensing range	≤ 100 ms			≤ 200 ms
Triple sensing range	≤ 50 ms			≤ 125 ms
Hysteresis	1 % ... 15 % (depending on type)			
Repeatability				
Standard sensing range	≤ 2 % [3] [4]			
Extended sensing range	≤ 2 % [3] [4]			
Triple sensing range	≤ 5 % [3] [4]			
Temperature drift (of S_r)	± 10 %			
EMC	According to EN 60947-5-2			
Continuous current I_a	≤ 200 mA			
Current consumption, no load	≤ 10 mA			
Connection type	Cable, 2 m, PVC / Male connector, M8 / Male connector, M12 (depending on type)			
Short-circuit protection	✔			

C

	IME08	IME12	IME18	IME30
Reverse polarity protection	✔			
Power-up pulse protection	✔			
Shock and vibration resistance	30 g, 11 ms/10 Hz ... 55 Hz, 1 mm			
Ambient operating temperature	–25 °C ... +75 °C			
Housing material	Nickel-plated brass			
Sensing face material	Plastic, PA6			
Tightening torque, max.				
Standard	Typ. 5 Nm	12 Nm	40 Nm	100 Nm
Short-body	Typ. 5 Nm	12 Nm	40 Nm	100 Nm / 70 Nm (depending on type)

[1] At I_a max.
[2] Without load.
[3] Ub and Ta constant.
[4] Of Sr.

C

Reduction factors

	IME08	IME12	IME18	IME30
Note	The values are reference values which may vary			
St37 steel (Fe)	1			
Stainless steel (V2A, 304)	Approx. 0.8			
Aluminum (Al)	Approx. 0.5			
Copper (Cu)	Approx. 0.4			
Brass (Br)	Approx. 0.5			

Ordering information

Other models ➜ www.sick.com/IME

IME08, standard sensing range

Sensing range S_n	Installation type	Housing	Connection	Output type	Output function	Connection diagram	Type	Part no.
1.5 mm	Flush	Standard	Cable, 3-wire, 2 m, PVC	NPN	NC	Cd-003	IME08-1B5NOZW2S	1040852
					NO	Cd-001	IME08-1B5NSZW2S	1040848
				PNP	NC	Cd-003	IME08-1B5POZW2S	1040844
					NO	Cd-001	IME08-1B5PSZW2S	1040840
			Connector M8, 3-pin	NPN	NC	Cd-004	IME08-1B5NOZT0S	1040850
					NO	Cd-002	IME08-1B5NSZT0S	1040846
				PNP	NC	Cd-004	IME08-1B5POZT0S	1040842
					NO	Cd-002	IME08-1B5PSZT0S	1040838
		Short-body	Cable, 3-wire, 2 m, PVC	NPN	NC	Cd-003	IME08-1B5NOZW2K	1040851
					NO	Cd-001	IME08-1B5NSZW2K	1040847
				PNP	NC	Cd-003	IME08-1B5POZW2K	1040843
					NO	Cd-001	IME08-1B5PSZW2K	1040839
			Connector M8, 3-pin	NPN	NC	Cd-004	IME08-1B5NOZT0K	1040849
					NO	Cd-002	IME08-1B5NSZT0K	1040845
				PNP	NC	Cd-004	IME08-1B5POZT0K	1040841
					NO	Cd-002	IME08-1B5PSZT0K	1040837

8014939/2016-08-29
Subject to change without notice

Sensing range S_n	Installation type	Housing	Connection	Output type	Output function	Connection diagram	Type	Part no.
2.5 mm	Non-flush	Standard	Cable, 3-wire, 2 m, PVC	NPN	NC	Cd-003	IME08-2N5NOZW2S	1040868
					NO	Cd-001	IME08-2N5NSZW2S	1040864
				PNP	NC	Cd-003	IME08-2N5POZW2S	1040860
					NO	Cd-001	IME08-2N5PSZW2S	1040856
			Connector M8, 3-pin	NPN	NC	Cd-004	IME08-2N5NOZT0S	1040866
					NO	Cd-002	IME08-2N5NSZT0S	1040862
				PNP	NC	Cd-004	IME08-2N5POZT0S	1040858
					NO	Cd-002	IME08-2N5PSZT0S	1040854
		Short-body	Cable, 3-wire, 2 m, PVC	NPN	NC	Cd-003	IME08-2N5NOZW2K	1040867
					NO	Cd-001	IME08-2N5NSZW2K	1040863
				PNP	NC	Cd-003	IME08-2N5POZW2K	1040859
					NO	Cd-001	IME08-2N5PSZW2K	1040855
			Connector M8, 3-pin	NPN	NC	Cd-004	IME08-2N5NOZT0K	1040865
					NO	Cd-002	IME08-2N5NSZT0K	1040861
				PNP	NC	Cd-004	IME08-2N5POZT0K	1040857
					NO	Cd-002	IME08-2N5PSZT0K	1040853

C

IME08, extended sensing range

Sensing range S_n	Installation type	Housing	Connection	Output type	Output function	Connection diagram	Type	Part no.
2 mm	Flush	Standard	Cable, 3-wire, 2 m, PVC	NPN	NC	Cd-003	IME08-02BNOZW2S	1040884
					NO	Cd-001	IME08-02BNSZW2S	1040880
				PNP	NC	Cd-003	IME08-02BPOZW2S	1040876
					NO	Cd-003	IME08-02BPSZW2S	1040872
			Connector M8, 3-pin	NPN	NC	Cd-004	IME08-02BNOZT0S	1040882
					NO	Cd-002	IME08-02BNSZT0S	1040878
				PNP	NC	Cd-004	IME08-02BPOZT0S	1040874
					NO	Cd-002	IME08-02BPSZT0S	1040870
			Male connector M12, 4-pin	NPN	NO	Cd-007	IME08-02BNSZC0S	1051127
				PNP	NO	Cd-007	IME08-02BPSZC0S	1051205
					NC	Cd-003	IME08-02BPOZC0S	1051207
		Short-body	Cable, 3-wire, 2 m, PVC	NPN	NC	Cd-003	IME08-02BNOZW2K	1040883
					NO	Cd-001	IME08-02BNSZW2K	1040879
				PNP	NC	Cd-003	IME08-02BPOZW2K	1040875
					NO	Cd-001	IME08-02BPSZW2K	1040871
			Connector M8, 3-pin	NPN	NC	Cd-004	IME08-02BNOZT0K	1040881
					NO	Cd-002	IME08-02BNSZT0K	1040877
				PNP	NC	Cd-004	IME08-02BPOZT0K	1040873
					NO	Cd-002	IME08-02BPSZT0K	1040869

C

Sensing range S_n	Installation type	Housing	Connection	Output type	Output function	Connection diagram	Type	Part no.
4 mm	Non-flush	Standard	Cable, 3-wire, 2 m, PVC	NPN	NC	Cd-003	IME08-04NNOZW2S	1040900
					NO	Cd-001	IME08-04NNSZW2S	1040896
				PNP	NC	Cd-003	IME08-04NPOZW2S	1040892
					NO	Cd-001	IME08-04NPSZW2S	1040888
			Connector M8, 3-pin	NPN	NC	Cd-004	IME08-04NNOZT0S	1040898
					NO	Cd-002	IME08-04NNSZT0S	1040894
				PNP	NC	Cd-004	IME08-04NPOZT0S	1040890
					NO	Cd-002	IME08-04NPSZT0S	1040886
			Male connector M12, 4-pin	PNP	NC	Cd-008	IME08-04NPOZC0S	1051208
					NO	Cd-007	IME08-04NPSZC0S	1051209
		Short-body	Cable, 3-wire, 2 m, PVC	NPN	NC	Cd-003	IME08-04NNOZW2K	1040899
					NO	Cd-001	IME08-04NNSZW2K	1040895
				PNP	NC	Cd-003	IME08-04NPOZW2K	1040891
					NO	Cd-001	IME08-04NPSZW2K	1040887
			Connector M8, 3-pin	NPN	NC	Cd-004	IME08-04NNOZT0K	1040897
					NO	Cd-002	IME08-04NNSZT0K	1040893
				PNP	NC	Cd-004	IME08-04NPOZT0K	1040889
					NO	Cd-002	IME08-04NPSZT0K	1040885

IME08, triple sensing range

Sensing range S_n	Installation type	Housing	Connection	Output type	Output function	Connection diagram	Type	Part no.
3 mm	Quasi-flush	Standard	Cable, 3-wire, 2 m, PVC	NPN	NC	Cd-003	IME08-03BNOZW2S	1074045
					NO	Cd-001	IME08-03BNSZW2S	1074044
				PNP	NC	Cd-003	IME08-03BPOZW2S	1074043
					NO	Cd-001	IME08-03BPSZW2S	1074042
			Connector M8, 3-pin	NPN	NC	Cd-004	IME08-03BNOZT0S	1074026
					NO	Cd-002	IME08-03BNSZT0S	1073663
				PNP	NC	Cd-004	IME08-03BPOZT0S	1073662
					NO	Cd-002	IME08-03BPSZT0S	1073457
			Male connector M12, 4-pin	NPN	NC	Cd-007	IME08-03BNOZC0S	1074033
					NO	Cd-007	IME08-03BNSZC0S	1074031
				PNP	NC	Cd-008	IME08-03BPOZC0S	1074030
					NO	Cd-007	IME08-03BPSZC0S	1074029
		Short-body	Cable, 3-wire, 2 m, PVC	NPN	NC	Cd-003	IME08-03BNOZW2K	1074035
					NO	Cd-001	IME08-03BNSZW2K	1074009
				PNP	NC	Cd-003	IME08-03BPOZW2K	1074008
					NO	Cd-001	IME08-03BPSZW2K	1074007
			Connector M8, 3-pin	NPN	NC	Cd-004	IME08-03BNOZT0K	1074041
					NO	Cd-002	IME08-03BNSZT0K	1074040
				PNP	NC	Cd-004	IME08-03BPOZT0K	1074038
					NO	Cd-002	IME08-03BPSZT0K	1074037

8014939/2016-08-29
Subject to change without notice

Sensing range S_n	Installation type	Housing	Connection	Output type	Output function	Connection diagram	Type	Part no.
6 mm	Non-flush	Standard	Cable, 3-wire, 2 m, PVC	NPN	NC	Cd-003	IME08-06NNOZW2S	1071207
					NO	Cd-001	IME08-06NNSZW2S	1071206
				PNP	NC	Cd-003	IME08-06NPOZW2S	1071205
					NO	Cd-001	IME08-06NPSZW2S	1071204
			Connector M8, 3-pin	NPN	NC	Cd-004	IME08-06NNOZT0S	1071211
					NO	Cd-002	IME08-06NNSZT0S	1071210
				PNP	NC	Cd-004	IME08-06NPOZT0S	1071209
					NO	Cd-002	IME08-06NPSZT0S	1071208
			Male connector M12, 4-pin	PNP	NC	Cd-008	IME08-06NPOZC0S	1071213
					NO	Cd-007	IME08-06NPSZC0S	1071212
		Short-body	Cable, 3-wire, 2 m, PVC	NPN	NC	Cd-003	IME08-06NNOZW2K	1071199
					NO	Cd-001	IME08-06NNSZW2K	1071198
				PNP	NC	Cd-003	IME08-06NPOZW2K	1071196
					NO	Cd-001	IME08-06NPSZW2K	1071195
			Connector M8, 3-pin	NPN	NC	Cd-004	IME08-06NNOZT0K	1071203
					NO	Cd-002	IME08-06NNSZT0K	1071202
				PNP	NC	Cd-004	IME08-06NPOZT0K	1071201
					NO	Cd-002	IME08-06NPSZT0K	1071200

C

IME12, standard sensing range

Sensing range S_n	Installation type	Housing	Connection	Output type	Output function	Connection diagram	Type	Part no.
2 mm	Flush	Standard	Cable, 3-wire, 2 m, PVC	NPN	NC	Cd-003	IME12-02BNOZW2S	1040746
					NO	Cd-001	IME12-02BNSZW2S	1040742
				PNP	NC	Cd-003	IME12-02BPOZW2S	1040738
					NO	Cd-001	IME12-02BPSZW2S	1040734
			Male connector M12, 4-pin	NPN	NC	Cd-008	IME12-02BNOZC0S	1040743
					NO	Cd-007	IME12-02BNSZC0S	1040740
				PNP	NC	Cd-008	IME12-02BPOZC0S	1040736
					NO	Cd-007	IME12-02BPSZC0S	1040732
		Short-body	Cable, 3-wire, 2 m, PVC	NPN	NC	Cd-001	IME12-02BNOZW2K	1040745
					NO	Cd-001	IME12-02BNSZW2K	1040741
				PNP	NC	Cd-003	IME12-02BPOZW2K	1040737
					NO	Cd-001	IME12-02BPSZW2K	1040733
			Male connector M12, 4-pin	NPN	NC	Cd-008	IME12-02BNOZC0K	1040744
					NO	Cd-007	IME12-02BNSZC0K	1040739
				PNP	NC	Cd-008	IME12-02BPOZC0K	1040735
					NO	Cd-007	IME12-02BPSZC0K	1040731

C

Sensing range S_n	Installation type	Housing	Connection	Output type	Output function	Connection diagram	Type	Part no.
4 mm	Non-flush	Standard	Cable, 3-wire, 2 m, PVC	NPN	NC	Cd-003	IME12-04NNOZW2S	1040762
					NO	Cd-001	IME12-04NNSZW2S	1040757
				PNP	NC	Cd-003	IME12-04NPOZW2S	1040754
					NO	Cd-001	IME12-04NPSZW2S	1040750
			Male connector M12, 4-pin	NPN	NC	Cd-008	IME12-04NNOZC0S	1040760
					NO	Cd-007	IME12-04NNSZC0S	1040756
				PNP	NC	Cd-008	IME12-04NPOZC0S	1040752
					NO	Cd-007	IME12-04NPSZC0S	1040748
		Short-body	Cable, 3-wire, 2 m, PVC	NPN	NC	Cd-003	IME12-04NNOZW2K	1040761
					NO	Cd-001	IME12-04NNSZW2K	1040758
				PNP	NC	Cd-003	IME12-04NPOZW2K	1040753
					NO	Cd-001	IME12-04NPSZW2K	1040749
			Male connector M12, 4-pin	NPN	NC	Cd-008	IME12-04NNOZC0K	1040759
					NO	Cd-007	IME12-04NNSZC0K	1040755
				PNP	NC	Cd-008	IME12-04NPOZC0K	1040751
					NO	Cd-007	IME12-04NPSZC0K	1040747

IME12, extended sensing range

Sensing range S_n	Installation type	Housing	Connection	Output type	Output function	Connection diagram	Type	Part no.
4 mm	Flush	Standard	Cable, 3-wire, 2 m, PVC	NPN	NC	Cd-003	IME12-04BNOZW2S	1040778
					NO	Cd-001	IME12-04BNSZW2S	1040774
				PNP	NO	Cd-001	IME12-04BPSZW2S	1040766
			Male connector M12, 4-pin	NPN	NC	Cd-008	IME12-04BNOZC0S	1040776
					NO	Cd-007	IME12-04BNSZC0S	1040772
				PNP	NC	Cd-008	IME12-04BPOZC0S	1040768
					NO	Cd-007	IME12-04BPSZC0S	1040764
		Short-body	Cable, 3-wire, 2 m, PVC	NPN	NC	Cd-003	IME12-04BNOZW2K	1040777
					NO	Cd-001	IME12-04BNSZW2K	1040773
				PNP	NC	Cd-003	IME12-04BPOZW2K	1040769
					NO	Cd-001	IME12-04BPSZW2K	1040765
			Male connector M12, 4-pin	NPN	NC	Cd-008	IME12-04BNOZC0K	1040775
					NO	Cd-007	IME12-04BNSZC0K	1040771
				PNP	NC	Cd-008	IME12-04BPOZC0K	1040767
					NO	Cd-007	IME12-04BPSZC0K	1040763

8014939/2016-08-29

Subject to change without notice

Sensing range S_n	Installation type	Housing	Connection	Output type	Output function	Connection diagram	Type	Part no.
8 mm	Non-flush	Standard	Cable, 3-wire, 2 m, PVC	NPN	NC	Cd-003	IME12-08NNOZW2S	1040793
					NO	Cd-001	IME12-08NNSZW2S	1040790
				PNP	NC	Cd-003	IME12-08NPOZW2S	1040786
					NO	Cd-001	IME12-08NPSZW2S	1040782
			Male connector M12, 4-pin	NPN	NC	Cd-008	IME12-08NNOZC0S	1040826
					NO	Cd-007	IME12-08NNSZC0S	1040788
				PNP	NC	Cd-008	IME12-08NPOZC0S	1040784
					NO	Cd-007	IME12-08NPSZC0S	1040780
		Short-body	Cable, 3-wire, 2 m, PVC	NPN	NC	Cd-003	IME12-08NNOZW2K	1040792
					NO	Cd-001	IME12-08NNSZW2K	1040789
				PNP	NC	Cd-003	IME12-08NPOZW2K	1040785
					NO	Cd-001	IME12-08NPSZW2K	1040781
			Male connector M12, 4-pin	NPN	NC	Cd-008	IME12-08NNOZC0K	1040791
					NO	Cd-007	IME12-08NNSZC0K	1040787
				PNP	NC	Cd-008	IME12-08NPOZC0K	1040783
					NO	Cd-007	IME12-08NPSZC0K	1040779

C

IME12, triple sensing range

Sensing range S_n	Installation type	Housing	Connection	Output type	Output function	Connection diagram	Type	Part no.
6 mm	Quasi-flush	Standard	Cable, 3-wire, 2 m, PVC	NPN	NC	Cd-003	IME12-06BNOZW2S	1071225
					NO	Cd-001	IME12-06BNSZW2S	1071224
				PNP	NC	Cd-003	IME12-06BPOZW2S	1071223
					NO	Cd-001	IME12-06BPSZW2S	1071222
			Male connector M12, 4-pin	NPN	NC	Cd-008	IME12-06BNOZC0S	1071229
					NO	Cd-007	IME12-06BNSZC0S	1071228
				PNP	NC	Cd-008	IME12-06BPOZC0S	1071227
					NO	Cd-007	IME12-06BPSZC0S	1071226
		Short-body	Cable, 3-wire, 2 m, PVC	NPN	NC	Cd-003	IME12-06BNOZW2K	1071217
					NO	Cd-001	IME12-06BNSZW2K	1071216
				PNP	NC	Cd-003	IME12-06BPOZW2K	1071215
					NO	Cd-001	IME12-06BPSZW2K	1071214
			Male connector M12, 4-pin	NPN	NC	Cd-008	IME12-06BNOZC0K	1071221
					NO	Cd-007	IME12-06BNSZC0K	1071220
				PNP	NC	Cd-008	IME12-06BPOZC0K	1071219
					NO	Cd-007	IME12-06BPSZC0K	1071218

C

Sensing range S_n	Installation type	Housing	Connection	Output type	Output function	Connection diagram	Type	Part no.
10 mm	Non-flush	Standard	Cable, 3-wire, 2 m, PVC	NPN	NC	Cd-003	IME12-10NNOZW2S	1071241
					NO	Cd-001	IME12-10NNSZW2S	1071240
				PNP	NC	Cd-003	IME12-10NPOZW2S	1071239
					NO	Cd-001	IME12-10NPSZW2S	1071238
			Male connector M12, 4-pin	NPN	NC	Cd-008	IME12-10NNOZC0S	1071245
					NO	Cd-007	IME12-10NNSZC0S	1071244
				PNP	NC	Cd-008	IME12-10NPOZC0S	1071243
					NO	Cd-007	IME12-10NPSZC0S	1071242
		Short-body	Cable, 3-wire, 2 m, PVC	NPN	NC	Cd-003	IME12-10NNOZW2K	1071233
					NO	Cd-001	IME12-10NNSZW2K	1071236
				PNP	NC	Cd-003	IME12-10NPOZW2K	1071231
					NO	Cd-001	IME12-10NPSZW2K	1071230
			Male connector M12, 4-pin	NPN	NC	Cd-008	IME12-10NNOZC0K	1071237
					NO	Cd-007	IME12-10NNSZC0K	1071232
				PNP	NC	Cd-008	IME12-10NPOZC0K	1071235
					NO	Cd-007	IME12-10NPSZC0K	1071234

IME18, standard sensing range

Sensing range S_n	Installation type	Housing	Connection	Output type	Output function	Connection diagram	Type	Part no.
5 mm	Flush	Standard	Cable, 3-wire, 2 m, PVC	NPN	NC	Cd-003	IME18-05BNOZW2S	1040948
					NO	Cd-001	IME18-05BNSZW2S	1040944
				PNP	NC	Cd-003	IME18-05BPOZW2S	1040940
					NO	Cd-001	IME18-05BPSZW2S	1040936
			Male connector M12, 4-pin	NPN	NC	Cd-008	IME18-05BNOZC0S	1040946
					NO	Cd-007	IME18-05BNSZC0S	1040942
				PNP	NC	Cd-008	IME18-05BPOZC0S	1040938
					NO	Cd-007	IME18-05BPSZC0S	1040934
		Short-body	Cable, 3-wire, 2 m, PVC	NPN	NC	Cd-003	IME18-05BNOZW2K	1040947
					NO	Cd-001	IME18-05BNSZW2K	1040943
				PNP	NC	Cd-003	IME18-05BPOZW2K	1040939
					NO	Cd-001	IME18-05BPSZW2K	1040935
			Male connector M12, 4-pin	NPN	NC	Cd-008	IME18-05BNOZC0K	1040945
					NO	Cd-007	IME18-05BNSZC0K	1040941
				PNP	NC	Cd-008	IME18-05BPOZC0K	1040937
					NO	Cd-007	IME18-05BPSZC0K	1040933
8 mm	Non-flush	Standard	Cable, 3-wire, 2 m, PVC	NPN	NC	Cd-003	IME18-08NNOZW2S	1040964
					NO	Cd-001	IME18-08NNSZW2S	1040960
				PNP	NC	Cd-003	IME18-08NPOZW2S	1040956
					NO	Cd-001	IME18-08NPSZW2S	1040952
			Male connector M12, 4-pin	NPN	NC	Cd-008	IME18-08NNOZC0S	1040962
					NO	Cd-007	IME18-08NNSZC0S	1040958
				PNP	NC	Cd-008	IME18-08NPOZC0S	1040954

8014939/2016-08-29

Subject to change without notice

Sensing range S_n	Installation type	Housing	Connection	Output type	Output function	Connection diagram	Type	Part no.
8 mm	Non-flush	Short-body	Cable, 3-wire, 2 m, PVC	NPN	NC	Cd-003	IME18-08NNOZW2K	1040963
					NO	Cd-001	IME18-08NNSZW2K	1040959
				PNP	NC	Cd-003	IME18-08NPOZW2K	1040955
					NO	Cd-001	IME18-08NPSZW2K	1040951
			Male connector M12, 4-pin	NPN	NC	Cd-008	IME18-08NNOZC0K	1040961
					NO	Cd-007	IME18-08NNSZC0K	1040957
				PNP	NC	Cd-008	IME18-08NPOZC0K	1040953
					NO	Cd-007	IME18-08NPSZC0K	1040949

IME18, extended sensing range

Sensing range S_n	Installation type	Housing	Connection	Output type	Output function	Connection diagram	Type	Part no.
8 mm	Flush	Standard	Cable, 3-wire, 2 m, PVC	NPN	NC	Cd-003	IME18-08BNOZW2S	1040980
					NO	Cd-001	IME18-08BNSZW2S	1040976
				PNP	NC	Cd-003	IME18-08BPOZW2S	1040972
					NO	Cd-001	IME18-08BPSZW2S	1040968
			Male connector M12, 4-pin	NPN	NC	Cd-008	IME18-08BNOZC0S	1040978
					NO	Cd-007	IME18-08BNSZC0S	1040974
				PNP	NC	Cd-008	IME18-08BPOZC0S	1040970
					NO	Cd-007	IME18-08BPSZC0S	1040966
		Short-body	Cable, 3-wire, 2 m, PVC	NPN	NC	Cd-003	IME18-08BNOZW2K	1040979
					NO	Cd-001	IME18-08BNSZW2K	1040975
				PNP	NC	Cd-003	IME18-08BPOZW2K	1040971
					NO	Cd-001	IME18-08BPSZW2K	1040967
			Male connector M12, 4-pin	NPN	NC	Cd-008	IME18-08BNOZC0K	1040977
					NO	Cd-007	IME18-08BNSZC0K	1040973
				PNP	NC	Cd-008	IME18-08BPOZC0K	1040969
					NO	Cd-007	IME18-08BPSZC0K	1040965
12 mm	Non-flush	Standard	Cable, 3-wire, 2 m, PVC	NPN	NC	Cd-003	IME18-12NNOZW2S	1040996
					NO	Cd-001	IME18-12NNSZW2S	1040992
				PNP	NC	Cd-003	IME18-12NPOZW2S	1040988
					NO	Cd-001	IME18-12NPSZW2S	1040984
			Male connector M12, 4-pin	NPN	NC	Cd-008	IME18-12NNOZC0S	1040994
					NO	Cd-007	IME18-12NNSZC0S	1040990
				PNP	NC	Cd-008	IME18-12NPOZC0S	1040986
					NO	Cd-007	IME18-12NPSZC0S	1040982
		Short-body	Cable, 3-wire, 2 m, PVC	NPN	NC	Cd-003	IME18-12NNOZW2K	1040995
					NO	Cd-001	IME18-12NNSZW2K	1040991
				PNP	NC	Cd-003	IME18-12NPOZW2K	1040987
					NO	Cd-001	IME18-12NPSZW2K	1040983
			Male connector M12, 4-pin	NPN	NC	Cd-008	IME18-12NNOZC0K	1040993
					NO	Cd-007	IME18-12NNSZC0K	1040989
				PNP	NC	Cd-008	IME18-12NPOZC0K	1040985
					NO	Cd-007	IME18-12NPSZC0K	1040981

C

IME18, triple sensing range

Sensing range S_n	Installation type	Housing	Connection	Output type	Output function	Connection diagram	Type	Part no.
12 mm	Quasi-flush	Standard	Cable, 3-wire, 2 m, PVC	NPN	NC	Cd-003	IME18-12BNOZW2S	1071259
					NO	Cd-001	IME18-12BNSZW2S	1071258
				PNP	NC	Cd-003	IME18-12BPOZW2S	1071257
					NO	Cd-001	IME18-12BPSZW2S	1071256
			Male connector M12, 4-pin	NPN	NC	Cd-008	IME18-12BNOZC0S	1071263
					NO	Cd-007	IME18-12BNSZC0S	1071262
				PNP	NC	Cd-008	IME18-12BPOZC0S	1071261
					NO	Cd-007	IME18-12BPSZC0S	1071260
		Short-body	Cable, 3-wire, 2 m, PVC	NPN	NC	Cd-003	IME18-12BNOZW2K	1071249
					NO	Cd-001	IME18-12BNSZW2K	1071248
				PNP	NC	Cd-003	IME18-12BPOZW2K	1071247
					NO	Cd-001	IME18-12BPSZW2K	1071246
			Male connector M12, 4-pin	NPN	NC	Cd-008	IME18-12BNOZC0K	1071255
					NO	Cd-007	IME18-12BNSZC0K	1071254
				PNP	NC	Cd-008	IME18-12BPOZC0K	1071253
					NO	Cd-007	IME18-12BPSZC0K	1071252
20 mm	Non-flush	Standard	Cable, 3-wire, 2 m, PVC	NPN	NC	Cd-003	IME18-20NNOZW2S	1071276
					NO	Cd-001	IME18-20NNSZW2S	1071275
				PNP	NC	Cd-003	IME18-20NPOZW2S	1071274
					NO	Cd-001	IME18-20NPSZW2S	1071273
			Male connector M12, 4-pin	NPN	NC	Cd-008	IME18-20NNOZC0S	1071280
					NO	Cd-007	IME18-20NNSZC0S	1071279
				PNP	NC	Cd-008	IME18-20NPOZC0S	1071278
					NO	Cd-007	IME18-20NPSZC0S	1071277
		Short-body	Cable, 3-wire, 2 m, PVC	NPN	NC	Cd-003	IME18-20NNOZW2K	1071268
					NO	Cd-001	IME18-20NNSZW2K	1071267
				PNP	NC	Cd-003	IME18-20NPOZW2K	1071265
					NO	Cd-001	IME18-20NPSZW2K	1071264
			Male connector M12, 4-pin	NPN	NC	Cd-008	IME18-20NNOZC0K	1071272
					NO	Cd-007	IME18-20NNSZC0K	1071271
				PNP	NC	Cd-008	IME18-20NPOZC0K	1071270
					NO	Cd-007	IME18-20NPSZC0K	1071269

IME30, standard sensing range

Sensing range S_n	Installation type	Housing	Connection	Output type	Output function	Connection diagram	Type	Part no.
10 mm	Flush	Standard	Cable, 3-wire, 2 m, PVC	NPN	NC	Cd-003	IME30-10BNOZW2S	1041012
					NO	Cd-001	IME30-10BNSZW2S	1041008
				PNP	NC	Cd-003	IME30-10BPOZW2S	1041004
					NO	Cd-001	IME30-10BPSZW2S	1041000
			Male connector M12, 4-pin	NPN	NC	Cd-008	IME30-10BNOZC0S	1041009
					NO	Cd-007	IME30-10BNSZC0S	1041006
				PNP	NC	Cd-008	IME30-10BPOZC0S	1041002
					NO	Cd-007	IME30-10BPSZC0S	1040998

8014939/2016-08-29
Subject to change without notice

Sensing range S_n	Installation type	Housing	Connection	Output type	Output function	Connection diagram	Type	Part no.
10 mm	Flush	Short-body	Cable, 3-wire, 2 m, PVC	NPN	NC	Cd-003	IME30-10BNOZW2K	1041011
					NO	Cd-001	IME30-10BNSZW2K	1041007
				PNP	NC	Cd-003	IME30-10BPOZW2K	1041003
					NO	Cd-001	IME30-10BPSZW2K	1040999
			Male connector M12, 4-pin	NPN	NC	Cd-008	IME30-10BNOZC0K	1041010
					NO	Cd-007	IME30-10BNSZC0K	1041005
				PNP	NC	Cd-008	IME30-10BPOZC0K	1041001
					NO	Cd-007	IME30-10BPSZC0K	1040997
15 mm	Non-flush	Standard	Cable, 3-wire, 2 m, PVC	NPN	NC	Cd-003	IME30-15NNOZW2S	1041028
					NO	Cd-001	IME30-15NNSZW2S	1041024
				PNP	NC	Cd-003	IME30-15NPOZW2S	1041020
					NO	Cd-001	IME30-15NPSZW2S	1041016
			Male connector M12, 4-pin	NPN	NC	Cd-008	IME30-15NNOZC0S	1041026
					NO	Cd-007	IME30-15NNSZC0S	1041022
				PNP	NC	Cd-008	IME30-15NPOZC0S	1041018
					NO	Cd-007	IME30-15NPSZC0S	1041014
		Short-body	Cable, 3-wire, 2 m, PVC	NPN	NC	Cd-003	IME30-15NNOZW2K	1041027
					NO	Cd-001	IME30-15NNSZW2K	1041023
				PNP	NC	Cd-003	IME30-15NPOZW2K	1041019
					NO	Cd-001	IME30-15NPSZW2K	1041015
			Male connector M12, 4-pin	NPN	NC	Cd-008	IME30-15NNOZC0K	1041025
					NO	Cd-007	IME30-15NNSZC0K	1041021
				PNP	NC	Cd-008	IME30-15NPOZC0K	1041017
					NO	Cd-007	IME30-15NPSZC0K	1041013

IME30, extended sensing range

Sensing range S_n	Installation type	Housing	Connection	Output type	Output function	Connection diagram	Type	Part no.
15 mm	Flush	Standard	Cable, 3-wire, 2 m, PVC	NPN	NC	Cd-003	IME30-15BNOZW2S	1041044
					NO	Cd-001	IME30-15BNSZW2S	1041040
				PNP	NC	Cd-003	IME30-15BPOZW2S	1041036
					NO	Cd-001	IME30-15BPSZW2S	1041032
			Male connector M12, 4-pin	NPN	NC	Cd-008	IME30-15BNOZC0S	1041042
					NO	Cd-007	IME30-15BNSZC0S	1041038
				PNP	NC	Cd-008	IME30-15BPOZC0S	1041034
					NO	Cd-007	IME30-15BPSZC0S	1041030
		Short-body	Cable, 3-wire, 2 m, PVC	NPN	NC	Cd-003	IME30-15BNOZW2K	1041043
					NO	Cd-001	IME30-15BNSZW2K	1041039
				PNP	NC	Cd-003	IME30-15BPOZW2K	1041035
					NO	Cd-001	IME30-15BPSZW2K	1041031
			Male connector M12, 4-pin	NPN	NC	Cd-008	IME30-15BNOZC0K	1041041
					NO	Cd-007	IME30-15BNSZC0K	1041037
				PNP	NC	Cd-008	IME30-15BPOZC0K	1041033
					NO	Cd-007	IME30-15BPSZC0K	1041029

C

Sensing range S_n	Installation type	Housing	Connection	Output type	Output function	Connection diagram	Type	Part no.
20 mm	Non-flush	Standard	Cable, 3-wire, 2 m, PVC	NPN	NC	Cd-003	IME30-20NNOZW2S	1041060
					NO	Cd-001	IME30-20NNSZW2S	1041056
				PNP	NO	Cd-001	IME30-20NPSZW2S	1041048
					NC	Cd-003	IME30-20NPOZW2S	1041052
			Male connector M12, 4-pin	NPN	NC	Cd-008	IME30-20NNOZC0S	1041058
					NO	Cd-007	IME30-20NNSZC0S	1041054
				PNP	NC	Cd-008	IME30-20NPOZC0S	1041050
					NO	Cd-007	IME30-20NPSZC0S	1041046
		Short-body	Cable, 3-wire, 2 m, PVC	NPN	NC	Cd-003	IME30-20NNOZW2K	1041059
					NO	Cd-001	IME30-20NNSZW2K	1041055
				PNP	NC	Cd-003	IME30-20NPOZW2K	1041051
					NO	Cd-001	IME30-20NPSZW2K	1041047
			Male connector M12, 4-pin	NPN	NC	Cd-008	IME30-20NNOZC0K	1041057
					NO	Cd-007	IME30-20NNSZC0K	1041053
				PNP	NC	Cd-008	IME30-20NPOZC0K	1041049
					NO	Cd-007	IME30-20NPSZC0K	1041045

IME30, triple sensing range

Sensing range S_n	Installation type	Housing	Connection	Output type	Output function	Connection diagram	Type	Part no.
20 mm	Quasi-flush	Standard	Cable, 3-wire, 2 m, PVC	NPN	NC	Cd-003	IME30-20BNOZW2S	1071292
					NO	Cd-001	IME30-20BNSZW2S	1071291
				PNP	NC	Cd-003	IME30-20BPOZW2S	1071290
					NO	Cd-001	IME30-20BPSZW2S	1071289
			Male connector M12, 4-pin	NPN	NC	Cd-008	IME30-20BNOZC0S	1071296
					NO	Cd-007	IME30-20BNSZC0S	1071295
				PNP	NC	Cd-008	IME30-20BPOZC0S	1071294
					NO	Cd-007	IME30-20BPSZC0S	1071293
		Short-body	Cable, 3-wire, 2 m, PVC	NPN	NC	Cd-003	IME30-20BNOZW2K	1071284
					NO	Cd-001	IME30-20BNSZW2K	1071283
				PNP	NC	Cd-003	IME30-20BPOZW2K	1071282
					NO	Cd-001	IME30-20BPSZW2K	1071281
			Male connector M12, 4-pin	NPN	NC	Cd-008	IME30-20BNOZC0K	1071288
					NO	Cd-007	IME30-20BNSZC0K	1071287
				PNP	NC	Cd-008	IME30-20BPOZC0K	1071286
					NO	Cd-007	IME30-20BPSZC0K	1071285
38 mm	Non-flush	Standard	Cable, 3-wire, 2 m, PVC	NPN	NC	Cd-003	IME30-38NNOZW2S	1071308
					NO	Cd-001	IME30-38NNSZW2S	1071307
				PNP	NC	Cd-003	IME30-38NPOZW2S	1071306
					NO	Cd-001	IME30-38NPSZW2S	1071305
			Male connector M12, 4-pin	NPN	NC	Cd-008	IME30-38NNOZC0S	1071312
					NO	Cd-007	IME30-38NNSZC0S	1071311
				PNP	NC	Cd-008	IME30-38NPOZC0S	1071310
					NO	Cd-007	IME30-38NPSZC0S	1071309

8014939/2016-08-29

Subject to change without notice

Sensing range S_n	Installation type	Housing	Connection	Output type	Output function	Connection diagram	Type	Part no.
38 mm	Non-flush	Short-body	Cable, 3-wire, 2 m, PVC	NPN	NC	Cd-003	IME30-38NNOZW2K	1071299
					NO	Cd-001	IME30-38NNSZW2K	1071298
				PNP	NC	Cd-003	IME30-38NPOZW2K	1071297
					NO	Cd-001	IME30-38NPSZW2K	1071300
			Male connector M12, 4-pin	NPN	NC	Cd-008	IME30-38NNOZC0K	1071304
					NO	Cd-007	IME30-38NNSZC0K	1071303
				PNP	NC	Cd-008	IME30-38NPOZC0K	1071302
					NO	Cd-007	IME30-38NPSZC0K	1071301

C

Dimensional drawings (Dimensions in mm (inch))

IME08 Standard, cable, flush

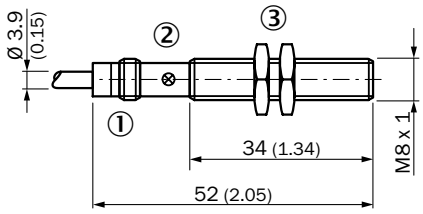

① Connection
② Indication LED
③ Fastening nuts (2x); width across 13, metal

IME08 Standard, connector, flush

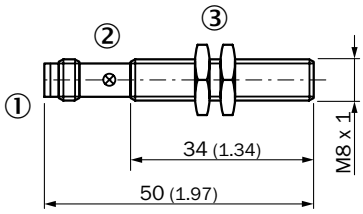

① Connection
② Indication LED
③ Fastening nuts (2x); width across 13, metal

IME08 Standard, cable, non-flush

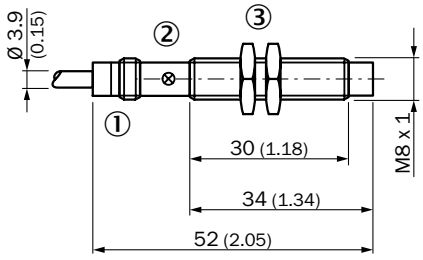

① Connection
② Indication LED
③ Fastening nuts (2x); width across 13, metal

IME08 standard, male connector, non-flush

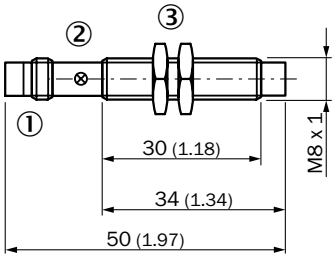

① Connection
② Indication LED
③ Fastening nuts (2x); width across 13, metal

IME08 Short-body housing, cable, flush

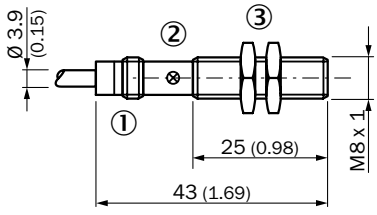

① Connection
② Indication LED
③ Fastening nuts (2x); width across 13, metal

IME12 Short-body housing, connector, flush

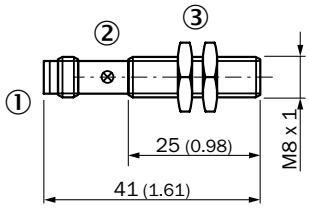

① Connection
② Indication LED
③ Fastening nuts (2x); width across 13, metal

C

IME08 short variant, cable, non-flush

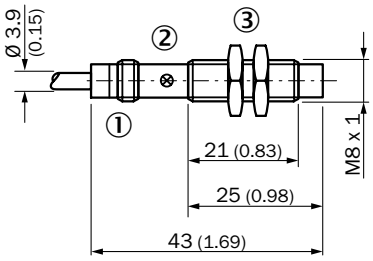

① Connection
② Indication LED
③ Fastening nuts (2x); width across 13, metal

IME08 Short-body housing, connector, non-flush

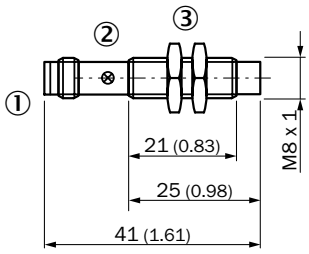

① Connection
② Indication LED
③ Fastening nuts (2x); width across 13, metal

IME08 Standard, connector, M12, flush

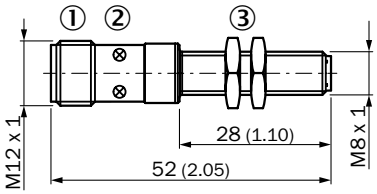

① Connection
② Indication LED
③ Fastening nuts (2x); width across 13, metal

IME08 Standard, connector M12, non-flush

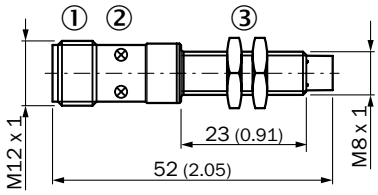

① Connection
② Indication LED
③ Fastening nuts (2x); width across 13, metal

IME12 standard, cable, flush

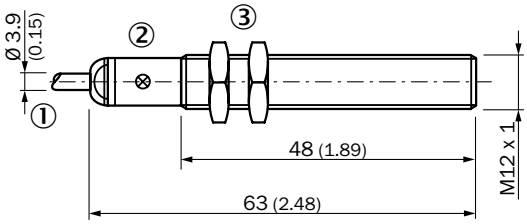

① Connection
② Indication LED
③ Fastening nuts (2x); width across 17, metal

IME12 Standard, connector, flush

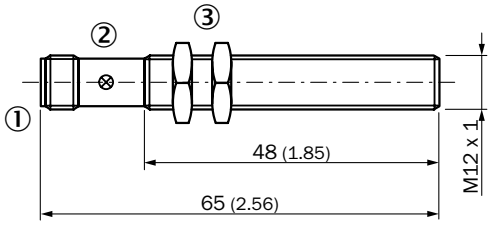

① Connection
② Indication LED
③ Fastening nuts (2x); width across 17, metal

IME12 standard, cable, non-flush

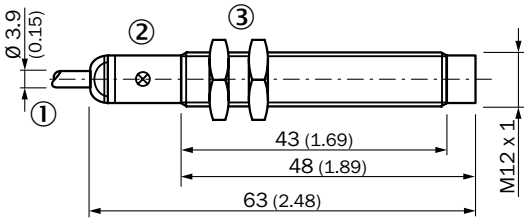

① Connection
② Indication LED
③ Fastening nuts (2x); width across 17, metal

IME12 Standard, connector, non-flush

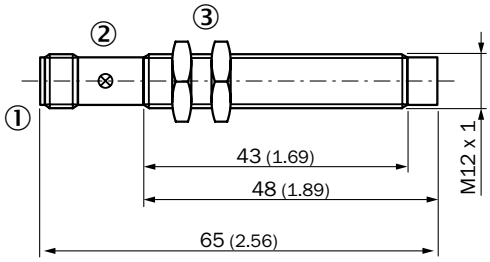

① Connection
② Indication LED
③ Fastening nuts (2x); width across 17, metal

C

IME12 short-body, cable, flush

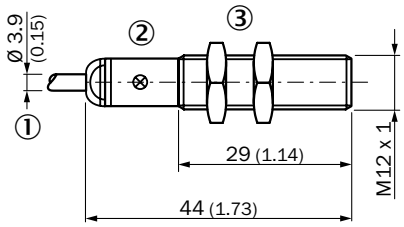

① Connection
② Indication LED
③ Fastening nuts (2x); width across 17, metal

IME12 Short-body housing, connector, flush

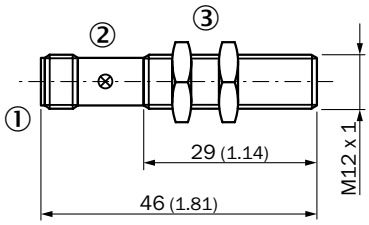

① Connection
② Indication LED
③ Fastening nuts (2x); width across 17, metal

IME12 Short-body housing, cable, non-flush

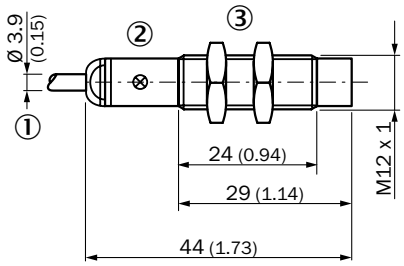

① Connection
② Indication LED
③ Fastening nuts (2x); width across 17, metal

IME12 Short-body housing, connector, non-flush

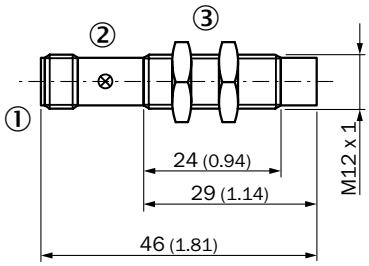

① Connection
② Indication LED
③ Fastening nuts (2x); width across 17, metal

IME18 standard, cable, flush

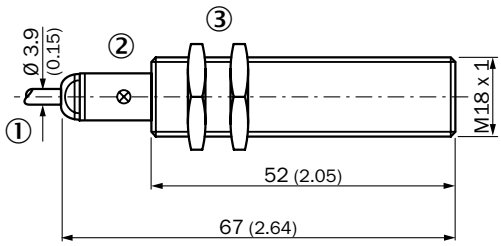

① Connection
② Indication LED
③ Fastening nuts (2x); width across 24, metal

IME18 Standard, connector, flush

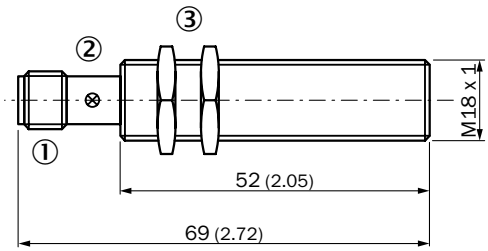

① Connection
② Indication LED
③ Fastening nuts (2x); width across 24, metal

IME18 Standard, cable, non-flush

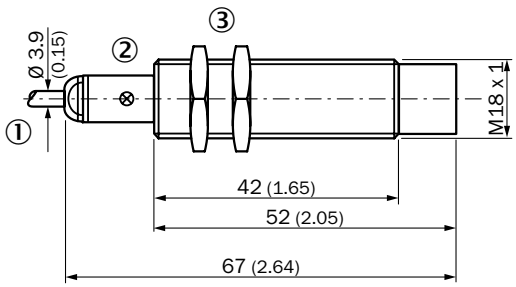

① Connection
② Indication LED
③ Fastening nuts (2x); width across 24, metal

IME18 Standard, connector, non-flush

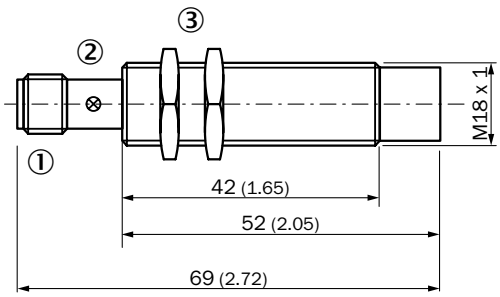

① Connection
② Indication LED
③ Fastening nuts (2x); width across 24, metal

C

IME18 Short-body housing, cable, flush

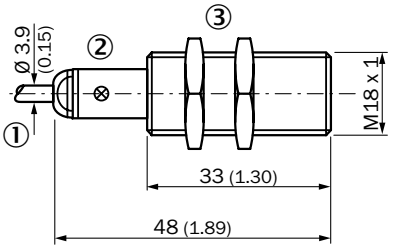

① Connection
② Indication LED
③ Fastening nuts (2x); width across 24, metal

IME18 Short-body housing, connector, flush

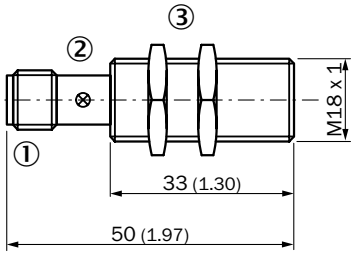

① Connection
② Indication LED
③ Fastening nuts (2x); width across 24, metal

IME18 Short-body housing, cable, non-flush

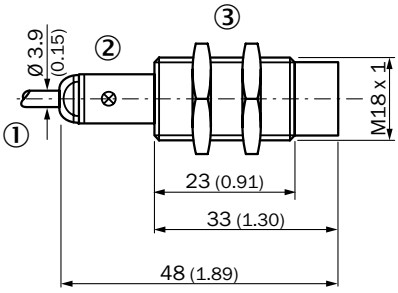

① Connection
② Indication LED
③ Fastening nuts (2x); width across 24, metal

IME18 Short-body housing, connector, non-flush

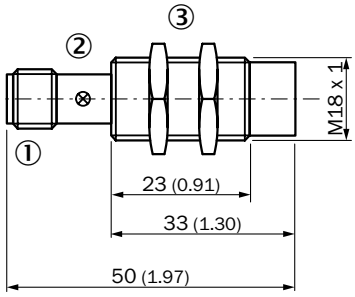

① Connection
② Indication LED
③ Fastening nuts (2x); width across 24, metal

IME30 Standard, cable, flush

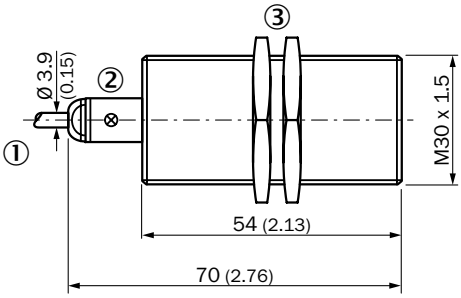

① Connection
② Indication LED
③ Fastening nuts (2x); width across 36, metal

IME30 Standard, connector, flush

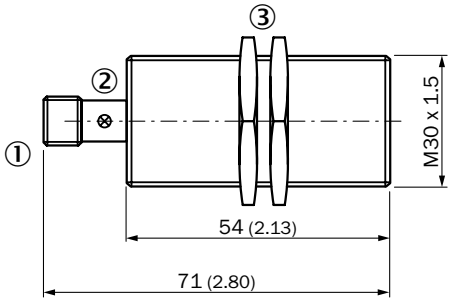

① Connection
② Indication LED
③ Fastening nuts (2x); width across 36, metal

IME30 Standard, cable, non-flush

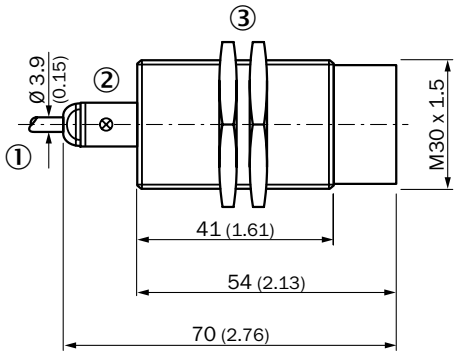

① Connection
② Indication LED
③ Fastening nuts (2x); width across 36, metal

IME30 Standard, connector, non-flush

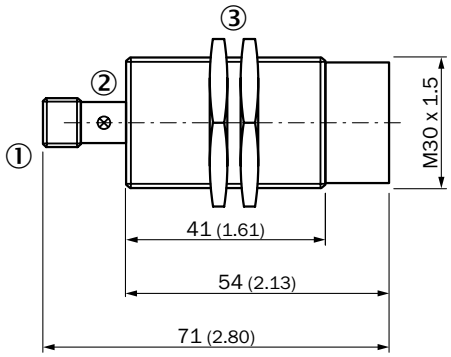

① Connection
② Indication LED
③ Fastening nuts (2x); width across 36, metal

C

IME30 Short-body housing, cable, flush

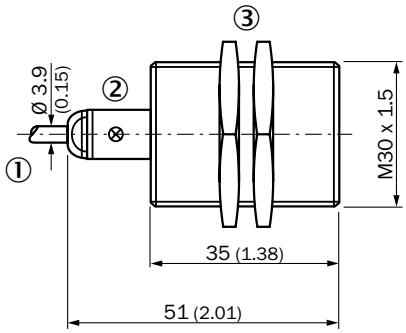

① Connection
② Indication LED
③ Fastening nuts (2x); width across 36, metal

IME30 Short-body housing, connector, flush

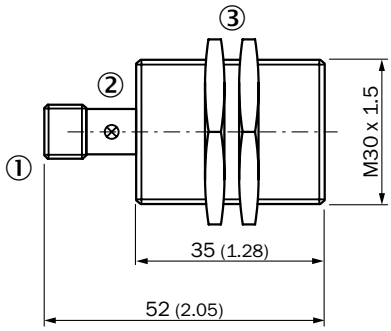

① Connection
② Indication LED
③ Fastening nuts (2x); width across 36, metal

IME30 Short-body housing, cable, non-flush

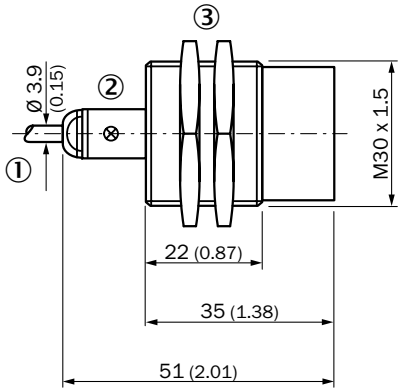

① Connection
② Indication LED
③ Fastening nuts (2x); width across 36, metal

IME30 Short-body housing, connector, non-flush

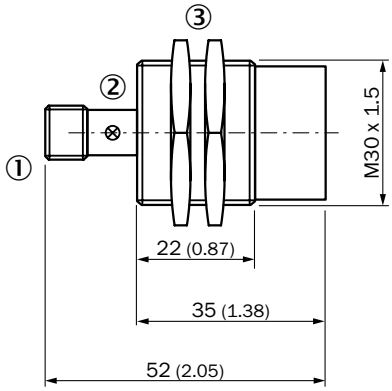

① Connection
② Indication LED
③ Fastening nuts (2x); width across 36, metal

Connection diagram

Cd-001

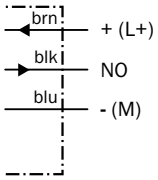

Cd-002

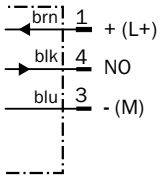

Cd-003

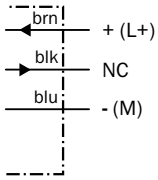

Cd-004

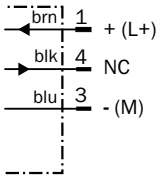

C

Cd-006

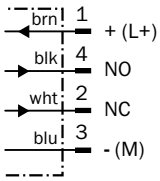

Cd-007

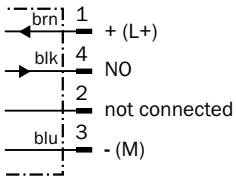

Cd-008

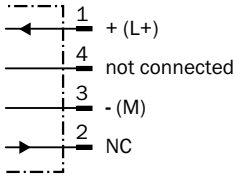

Installation note

Flush installation

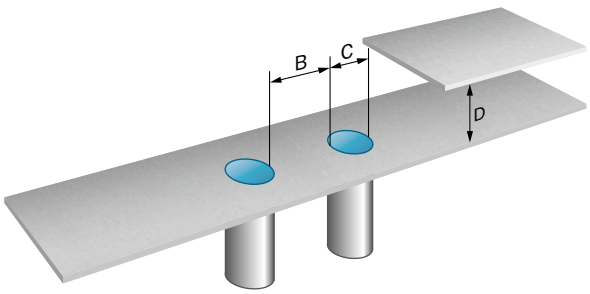

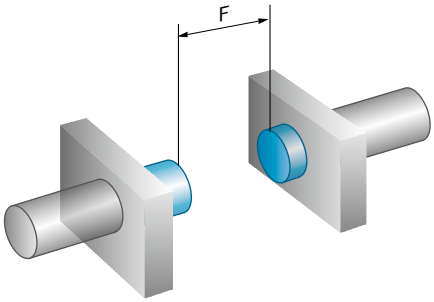

Quasi-flush / non-flush installation

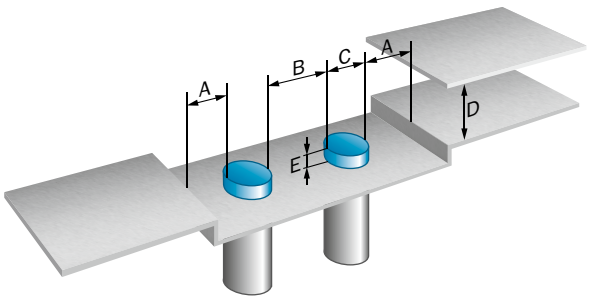

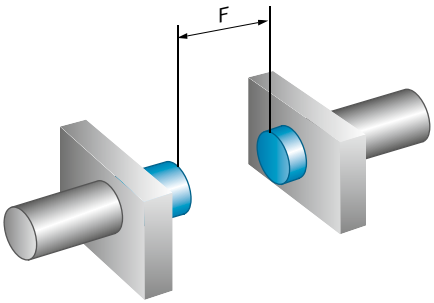

	Sensing range Sn	Installation type	A	B	C	D	E	F
IME08-1B5xxxxxx	1,5 mm	Flush	8 mm	8 mm	4,5 mm	-	12 mm	-
IME08-02Bxxxxxx	2 mm	Flush	-	16 mm	8 mm	6 mm	-	16 mm
IME12-02Bxxxxxx	2 mm	Flush	-	12 mm	12 mm	6 mm	-	16 mm

	Sensing range Sn	Installation type	A	B	C	D	E	F
IME08-2N5xxxxxx	2,5 mm	Non-flush	8 mm	16 mm	8 mm	7,5 mm	6 mm	20 mm
IME08-03Bxxxxxx	3 mm	Quasi-flush	3 mm	20 mm	8 mm	9 mm	1 mm	30 mm
IME08-04Nxxxxxx	4 mm	Non-flush	8 mm	18 mm	8 mm	12 mm	8 mm	32 mm
IME12-04Bxxxxxx	4 mm	Flush	-	24 mm	12 mm	12 mm	-	32 mm
IME12-04Nxxxxxx	4 mm	Non-flush	12 mm	24 mm	12 mm	12 mm	8 mm	32 mm
IME18-05Bxxxxxx	5 mm	Flush	-	18 mm	18 mm	15 mm	-	40 mm
IME08-06Nxxxxxx	6 mm	Non-flush	16 mm	30 mm	8 mm	18 mm	10 mm	60 mm
IME12-06Bxxxxxx	6 mm	Quasi-flush	6 mm	25 mm	12 mm	18 mm	2 mm	60 mm
IME12-08Nxxxxxx	8 mm	Non-flush	12 mm	24 mm	12 mm	24 mm	16 mm	64 mm
IME18-08Bxxxxxx	8 mm	Flush	-	36 mm	18 mm	24 mm	-	64 mm
IME18-08Nxxxxxx	8 mm	Non-flush	18 mm	36 mm	18 mm	24 mm	16 mm	64 mm
IME12-10Nxxxxxx	10 mm	Non-flush	15 mm	45 mm	12 mm	30 mm	13 mm	100 mm
IME30-10Bxxxxxx	10 mm	Flush	-	30 mm	30 mm	30 mm	-	80 mm
IME18-12Nxxxxxx	12 mm	Non-flush	18 mm	36 mm	18 mm	36 mm	24 mm	96 mm
IME18-12Bxxxxxx	12 mm	Quasi-flush	14 mm	35 mm	18 mm	36 mm	4 mm	120 mm
IME30-15Bxxxxxx	15 mm	Flush	-	60 mm	30 mm	45 mm	-	120 mm
IME30-15Nxxxxxx	15 mm	Non-flush	30 mm	60 mm	30 mm	45 mm	30 mm	120 mm
IME18-20Nxxxxxx	20 mm	Non-flush	30 mm	86 mm	18 mm	60 mm	20 mm	200 mm
IME30-20Nxxxxxx	20 mm	Non-flush	30 mm	60 mm	30 mm	60 mm	40 mm	160 mm
IME30-20Bxxxxxx	20 mm	Quasi-flush	33 mm	80 mm	30 mm	60 mm	6 mm	200 mm
IME30-38Nxxxxxx	38 mm	Non-flush	80 mm	180 mm	30 mm	114 mm	35 mm	380 mm

C

Accessories

Figure	Accessory	Page
	Plug connectors and cables	➜ H-267
	Mounting systems	➜ H-258
	Further accessories	➜ H-280

THE RUGGED STANDARD FOR USE IN HARSH AMBIENT CONDITIONS

C

Product description

The inductive IMB proximity sensor is a byword for reliability in harsh working conditions, whether it is in contact with cooling lubricants or being used outdoors. With its extended sensing ranges, made highly precise thanks to the use of SICK ASIC technology, the IMB ensures reliable, stable processes. What's more, its wide-ranging specification limits allow the IMB to be used in applications where specialist devices were once the only solution – a huge benefit when it comes to product selection and warehousing. The optical adjustment indicator and self-locking nuts save time during commissioning and help cut down on errors. With an extensive standard product portfolio available, even special devices can be put into action quickly and easily.

At a glance

- Types: M8 to M30
- Extended sensing ranges: 2 mm to 20 mm
- Electrical configuration: DC 2-wire
- Enclosure rating: IP 68, IP 69K
- Temperature range: –40 °C to +100 °C
- Rugged stainless-steel housing; plastic sensing face
- Optical adjustment indicator
- Resistant to oils and cooling lubricants; suitable for use outdoors

Your benefits

- Straightforward product selection as fewer sensor variants are required – one sensor suits a whole range of applications
- Stable processes thanks to extended, highly precise sensing ranges enabled through the use of the latest SICK ASIC technology
- Reduced machine downtimes thanks to longer sensor service life, even in harsh working conditions
- Quick and easy installation thanks to optical adjustment indicator and self-locking nuts
- Easy to implement customer-specific variants within the standard product portfolio

Additional information

Detailed technical data C-77
Ordering information C-78
Dimensional drawings C-79
Connection diagram. C-82
Response diagram C-82
Installation note C-84
Accessories. C-84

➜ www.sick.com/IMB

For more information, simply enter the link or scan the QR code and get direct access to technical data, CAD design models, operating instructions, software, application examples, and much more.

8014939/2016-08-29
Subject to change without notice

Detailed technical data

Features

	IMB08	IMB12	IMB18	IMB30
Housing	Cylindrical thread design			
Thread size	M8 x 1	M12 x 1	M18 x 1	M30 x 1.5
Sensing range S_n				
Flush	2 mm	4 mm	8 mm	15 mm
Non-flush	4 mm	8 mm	12 mm	20 mm
Installation type	Flush / non-flush (depending on type)			
Switching frequency	4,000 Hz	2,000 Hz	1,000 Hz	500 Hz
Output function	NO			
Electrical wiring	DC 2-wire			
Enclosure rating	IP 68 [2], IP 69K [3]			
Special features	Resistant against coolant lubricants, Optical adjustment indicator			

[1] With gold plated contact pins.
[2] According to EN 60529.
[3] According to ISO 20653:2013-03.

C

Mechanics/electronics

	IMB08	IMB12	IMB18	IMB30
Supply voltage	10 V DC ... 30 V DC			
Ripple	≤ 10 %			
Voltage drop	≤ 4 V [1] / ≤ 4.5 V [2]			
Time delay before availability	≤ 100 ms			
Hysteresis	3 % ... 20 %			
Repeatability [3] [4]	≤ 2 %			
Temperature drift (of S_r)	± 10 %			
EMC	According to EN 60947-5-2			
Continuous current I_a	≤ 100 mA			
Off-state current	Typ. 0.8 mA (≤ 1.2 mA at Ub max and 100 ° C)			
Load resistance, min.	≥ 3 mA			
Connection type	Cable, 2 m, PUR Male connector, M8 [5] (depending on type)	Cable, 2 m, PUR Male connector, M12 [5] (depending on type)		
Short-circuit protection	✔			
Reverse polarity protection	✔			
Power-up pulse	≤ 5 ms			
Shock and vibration resistance	100 g / 11 ms / 500 cycles; 150 g / 1 Mio cycles; 10 Hz ... 55 Hz / 1 mm; 55 Hz ... 500 Hz / 15 g			
Ambient operating temperature	–40 °C ... +100 °C			
Housing material	Stainless steel, V2A (1.4305)			
Sensing face material	Plastic, LCP			
Tightening torque, max.	Typ. 14 Nm	Typ. 32 Nm	Typ. 90 Nm	Typ. 100 Nm
Protection class	–	II [7]		

[1] At I_a = 30 mA.
[2] At I_a max.
[3] Ub and Ta constant.
[4] Of Sr.
[5] With gold plated contact pins.
[6] Valid if toothed side of nut is used.
[7] Reference voltage DC 50 V.

C

Reduction factors

	IMB08	IMB12	IMB18	IMB30
Note	The values are reference values which may vary			
Stainless steel (V2A, 304)				
Flush	Approx. 0.74	Approx. 0.65	Approx. 0.55	Approx. 0.62
Non-flush	Approx. 0.69	Approx. 0.67	Approx. 0.7	Approx. 0.78
Aluminum (Al)				
Flush	Approx. 0.43	Approx. 0.35	Approx. 0.24	Approx. 0.26
Non-flush	Approx. 0.37	Approx. 0.42	Approx. 0.43	Approx. 0.44
Copper (Cu)				
Flush	Approx. 0.33	Approx. 0.24	Approx. 0.19	Approx. 0.17
Non-flush	Approx. 0.28	Approx. 0.35	Approx. 0.37	Approx. 0.36
Brass (Br)				
Flush	Approx. 0.46	Approx. 0.38	Approx. 0.24	Approx. 0.27
Non-flush	Approx. 0.4	Approx. 0.42	Approx. 0.43	Approx. 0.46

Ordering information

Other models ➜ www.sick.com/IMB

IMB08

Installation type	Sensing range S_n	Housing	Connection	Connection diagram	Type	Part no.
Flush	2 mm	Short-body	Cable, 2-wire, 2 m, PUR	Cd-012	IMB08-02BDSVU2K	1075585
			Male connector, M8, 3-pin	Cd-246	IMB08-02BDSVT0K	1075583
		Standard	Cable, 2-wire, 2 m, PUR	Cd-012	IMB08-02BDSVU2S	1074354
			Male connector, M8, 3-pin	Cd-246	IMB08-02BDSVT0S	1074348
Non-flush	4 mm	Short-body	Cable, 2-wire, 2 m, PUR	Cd-012	IMB08-04NDSVU2K	1075586
			Male connector, M8, 3-pin	Cd-246	IMB08-04NDSVT0K	1075584
		Standard	Cable, 2-wire, 2 m, PUR	Cd-012	IMB08-04NDSVU2S	1074358
			Male connector, M8, 3-pin	Cd-246	IMB08-04NDSVT0S	1076276

IMB12

Installation type	Sensing range S_n	Housing	Connection	Connection diagram	Type	Part no.
Flush	4 mm	Short-body	Cable, 2-wire, 2 m, PUR	Cd-012	IMB12-04BDSVU2K	1074368
		Standard	Cable, 2-wire, 2 m, PUR	Cd-012	IMB12-04BDSVU2S	1074365
			Male connector, M12, 4-pin	Cd-015	IMB12-04BDSVC0S	1074364
Non-flush	8 mm	Short-body	Cable, 2-wire, 2 m, PUR	Cd-012	IMB12-08NDSVU2K	1076281
		Standard	Cable, 2-wire, 2 m, PUR	Cd-012	IMB12-08NDSVU2S	1076278
			Male connector, M12, 4-pin	Cd-015	IMB12-08NDSVC0S	1076277

IMB18

Installation type	Sensing range S_n	Housing	Connection	Connection diagram	Type	Part no.
Flush	8 mm	Short-body	Cable, 2-wire, 2 m, PUR	Cd-012	IMB18-08BDSVU2K	1074380
		Standard	Cable, 2-wire, 2 m, PUR	Cd-012	IMB18-08BDSVU2S	1074374
			Male connector, M12, 4-pin	Cd-015	IMB18-08BDSVC0S	1074373

8014939/2016-08-29

Subject to change without notice

Installation type	Sensing range S_n	Housing	Connection	Connection diagram	Type	Part no.
Non-flush	12 mm	Short-body	Cable, 2-wire, 2 m, PUR	Cd-012	IMB18-12NDSVU2K	1076283
		Standard	Cable, 2-wire, 2 m, PUR	Cd-012	IMB18-12NDSVU2S	1074375
			Male connector, M12, 4-pin	Cd-015	IMB18-12NDSVC0S	1076282

IMB30

Installation type	Sensing range S_n	Housing	Connection	Connection diagram	Type	Part no.
Flush	15 mm	Short-body	Cable, 2-wire, 2 m, PUR	Cd-012	IMB30-15BDSVU2K	1074420
		Standard	Cable, 2-wire, 2 m, PUR	Cd-012	IMB30-15BDSVU2S	1074413
			Male connector, M12, 4-pin	Cd-015	IMB30-15BDSVC0S	1074410
Non-flush	20 mm	Short-body	Cable, 2-wire, 2 m, PUR	Cd-012	IMB30-20NDSVU2K	1076284
		Standard	Cable, 2-wire, 2 m, PUR	Cd-012	IMB30-20NDSVU2S	1074414
			Male connector, M12, 4-pin	Cd-015	IMB30-20NDSVC0S	1076291

C

Dimensional drawings (Dimensions in mm (inch))

IMB08 Standard, cable, flush

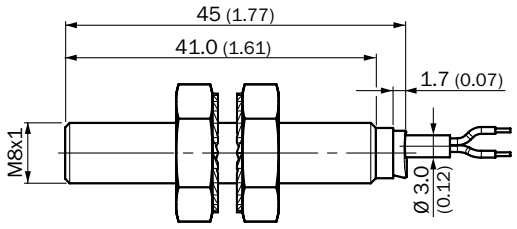

IMB08 Standard, connector, M8, flush

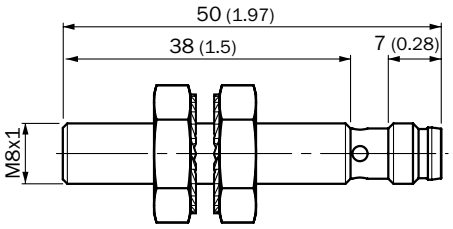

IMB08 Standard, cable, non-flush

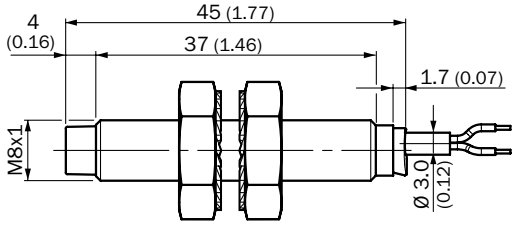

IMB08 Standard, connector M8, non-flush

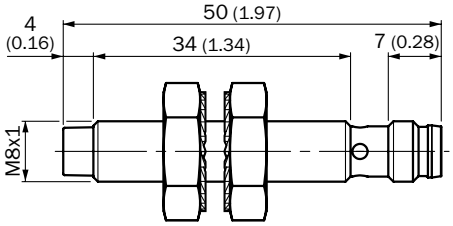

IMB08 Short-body housing, cable, flush

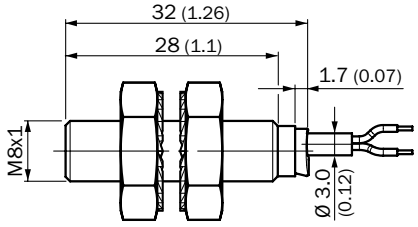

IMB08 Short-body housing, connector M8, flush

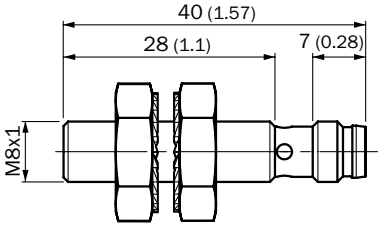

C

IMB08 Short-body housing, cable, non-flush

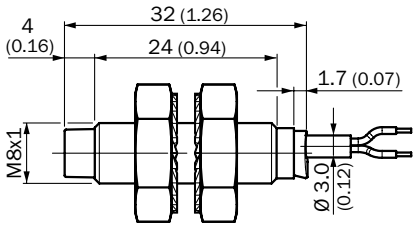

IMB08 Short-body housing, connector M8, non-flush

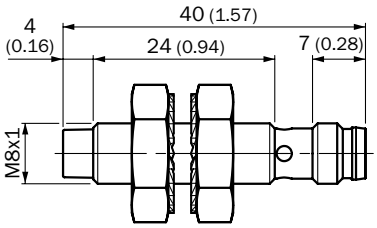

IMB12 standard, cable, flush

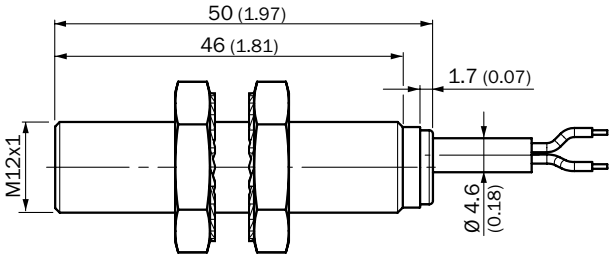

IMB12 Standard, connector, M12, flush

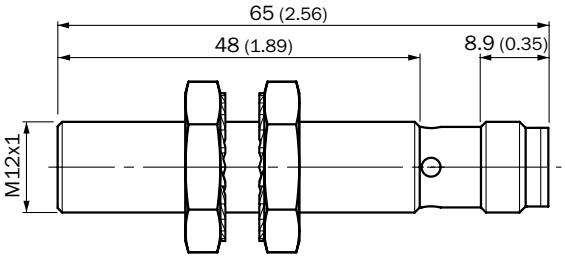

IMB12 Standard, cable, non-flush

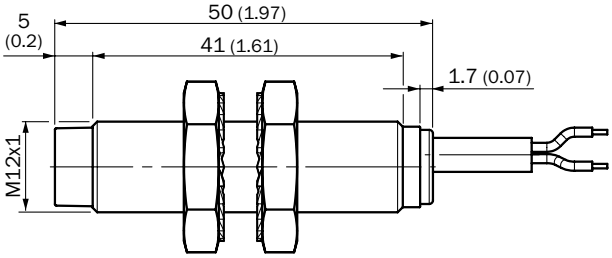

IMB12 Standard, connector M12, non-flush

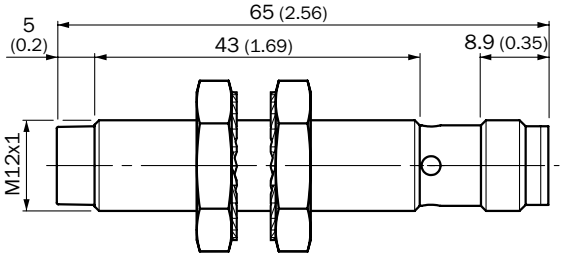

IMB12 Short-body housing, cable, flush

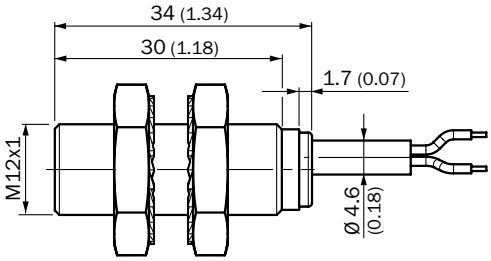

IMB12 Short-body housing, cable, non-flush

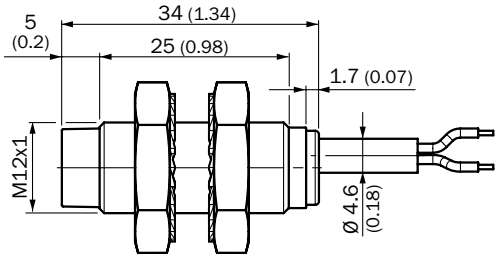

IMB18 Standard, cable, flush

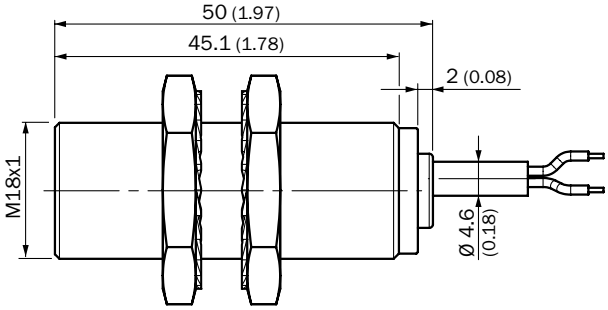

IMB18 Standard, connector, M12, flush

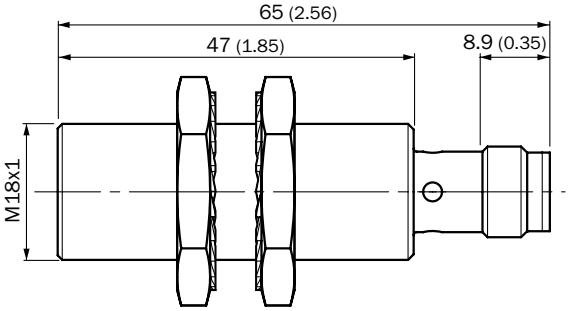

IMB18 Standard, cable, non-flush

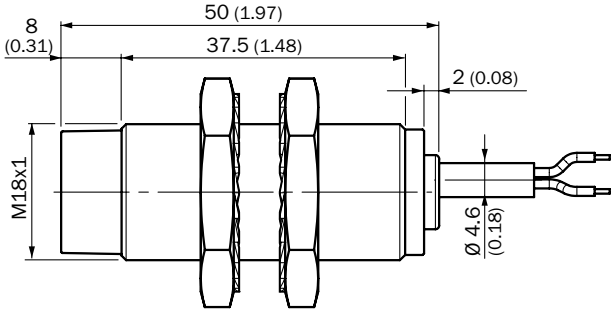

IMB18 Standard, connector M12, non-flush

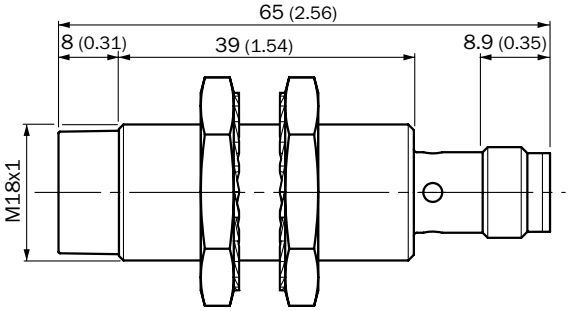

IMB18 Short-body housing, cable, flush

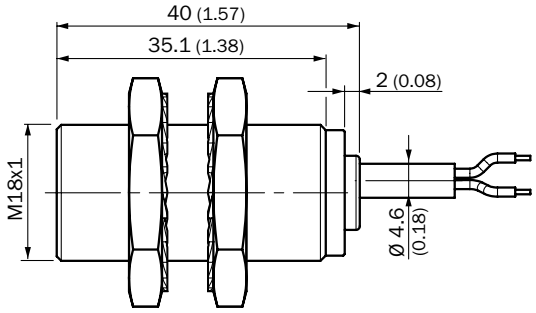

IMB18 Short-body housing, cable, non-flush

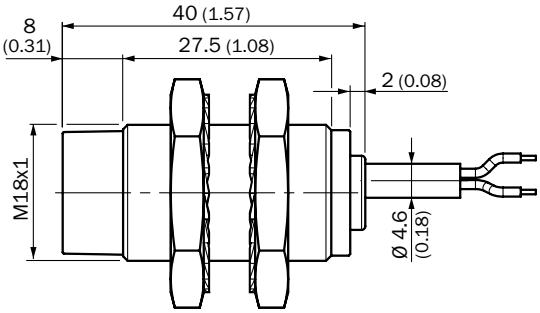

IMB30 Standard, cable, flush

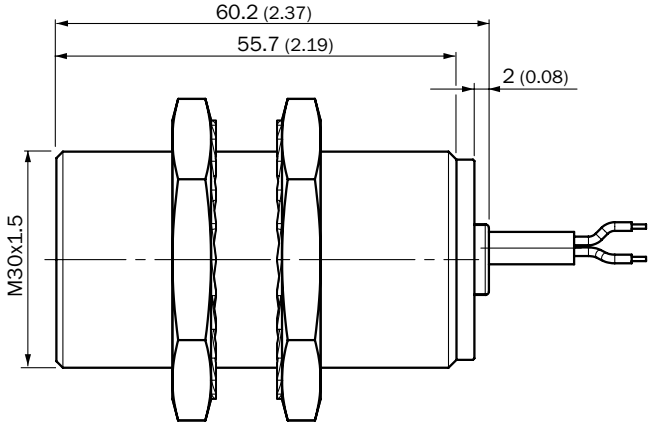

IMB30 Standard, connector, M12, flush

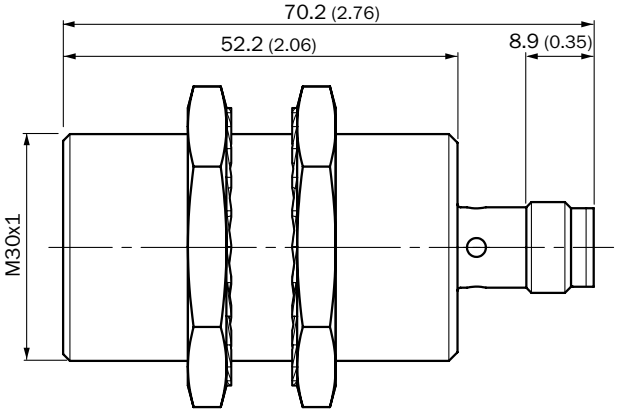

IMB30 Standard, cable, non-flush

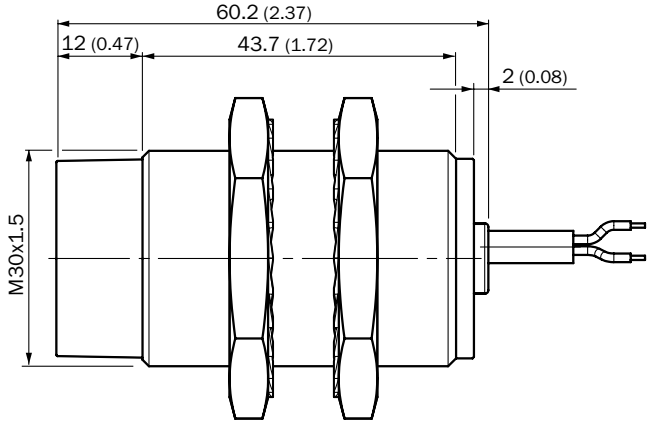

IMB30 Standard, connector M12, non-flush

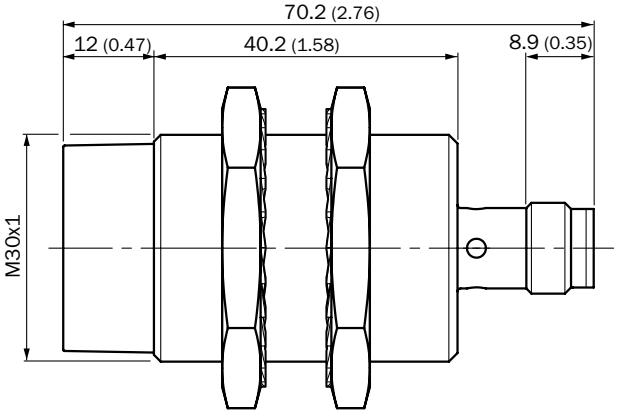

C

IMB30 Short-body housing, cable, flush

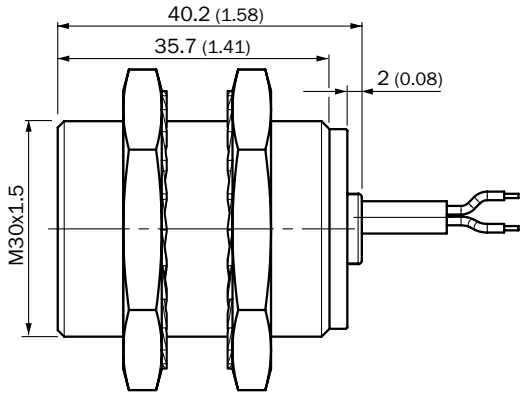

IMB30 Short-body housing, cable, non-flush

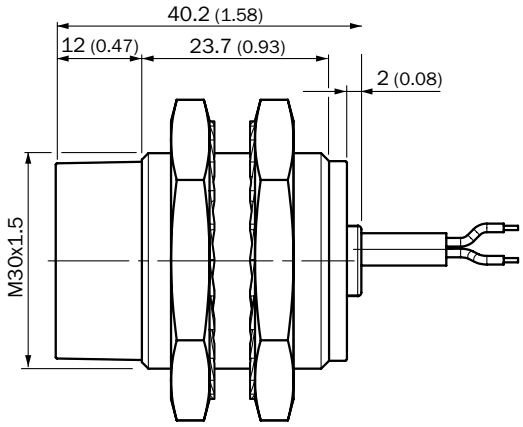

C

Connection diagram

Cd-012

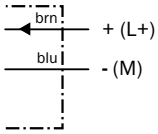

Cd-015

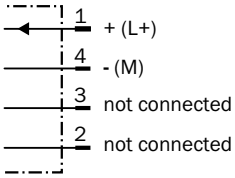

Cd-246

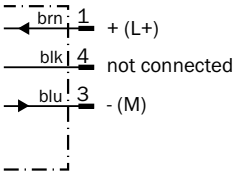

Response diagram

IMB08, flush installation

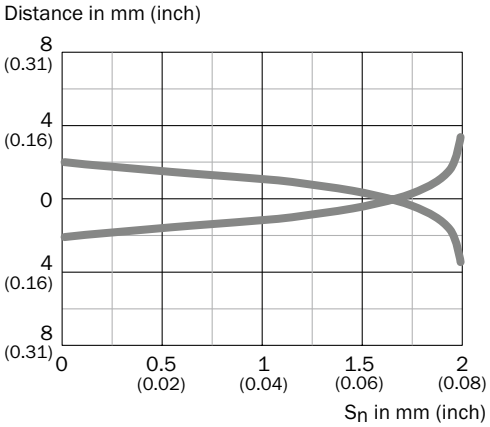

IMB08, non-flush installation

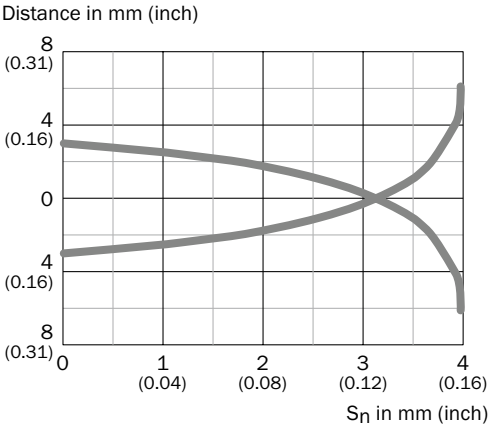

IMB12, flush installation

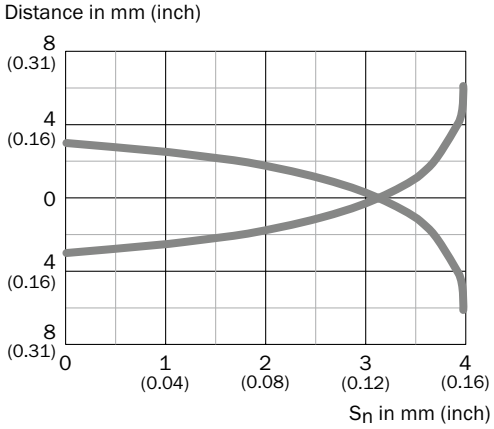

IMB12, non-flush installation

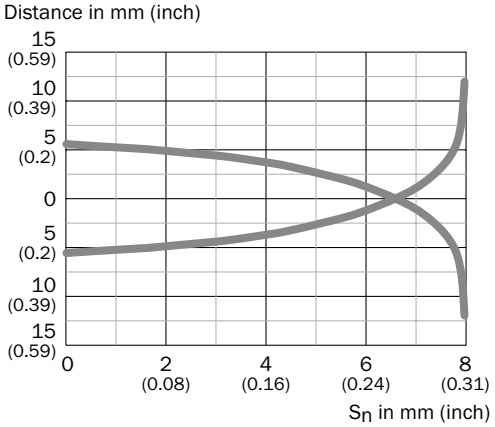

C

IMB18, flush installation

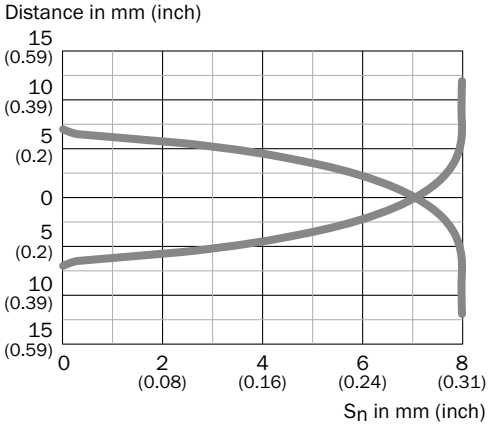

IMB18, non-flush installation

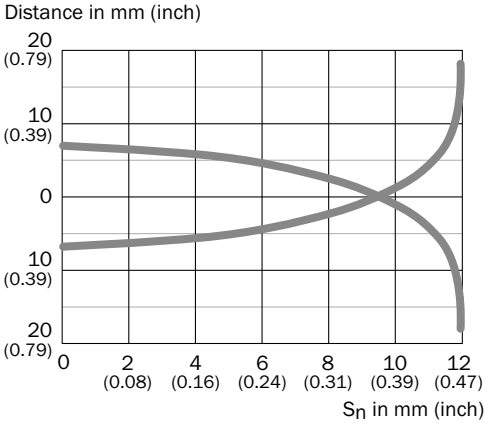

IMB30, flush installation

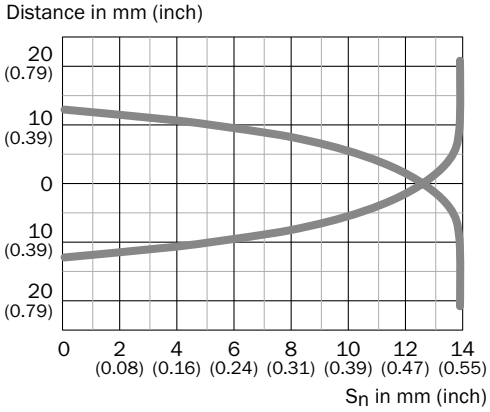

IMB30, non-flush installation

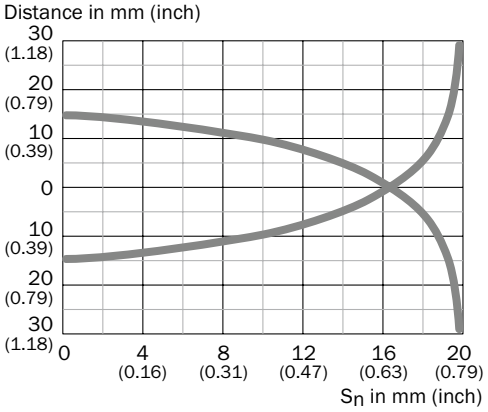

Installation note

Flush installation

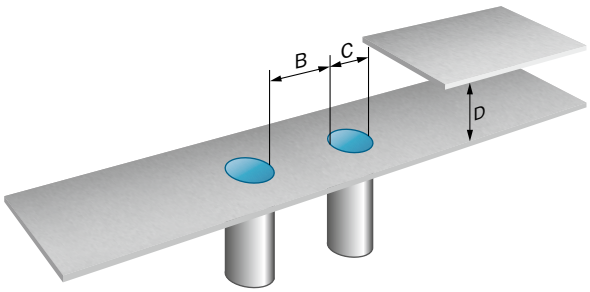

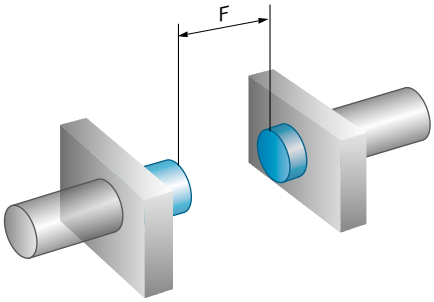

Non-flush installation

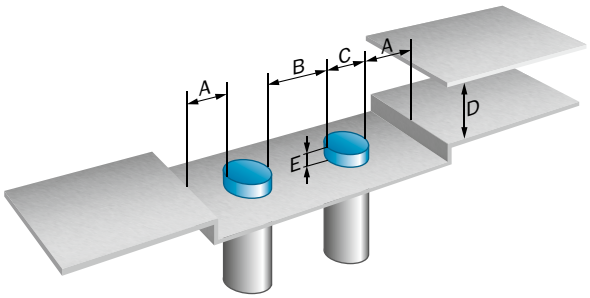

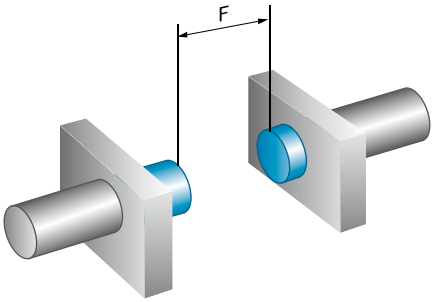

	Sensing range Sn	Installation type	A	B	C	D	E	F
IMB08-02Bxxxxxx	2 mm	Flush	-	6,5 mm	8 mm	6 mm	-	16 mm
IMB08-04Nxxxxxx	4 mm	Non-flush	8 mm	18 mm	8 mm	12 mm	8 mm	32 mm
IMB12-04Bxxxxxx	4 mm	Flush	-	12 mm	12 mm	12 mm	-	32 mm
IMB12-08Nxxxxxx	8 mm	Non-flush	12 mm	24 mm	12 mm	24 mm	16 mm	64 mm
IMB18-08Bxxxxxx	8 mm	Flush	9 mm	18 mm	18 mm	24 mm	2 mm	64 mm
IMB18-12Nxxxxxx	12 mm	Non-flush	18 mm	36 mm	18 mm	34 mm	12 mm	96 mm
IMB30-15Bxxxxxx	15 mm	Flush	-	40 mm	30 mm	45 mm	-	120 mm
IMB30-20Nxxxxxx	20 mm	Non-flush	20 mm	62 mm	30 mm	60 mm	20 mm	160 mm

Accessories

Figure	Accessory	Page
	Plug connectors and cables	➜ H-267
	Mounting systems	➜ H-258
	Further accessories	➜ H-280

C

THE RUGGED STANDARD FOR USE IN HARSH AMBIENT CONDITIONS

C

Product description

The inductive IMB proximity sensor is a byword for reliability in harsh working conditions, whether it is in contact with cooling lubricants or being used outdoors. With its extended sensing ranges, made highly precise thanks to the use of SICK ASIC technology, the IMB ensures reliable, stable processes. What's more, its wide-ranging specification limits allow the IMB to be used in applications where specialist devices were once the only solution – a huge benefit when it comes to product selection and warehousing. The optical adjustment indicator and self-locking nuts save time during commissioning and help cut down on errors. Communication via IO-Link is also possible, creating more flexibility and adding more functions for automation applications. With an extensive standard product portfolio available, even special devices can be put into action quickly and easily.

At a glance

- Types: M8 to M30
- Extended sensing ranges: 2 mm to 20 mm
- Electrical configuration: DC 3-/4-wire
- Enclosure rating: IP 68, IP 69K
- Temperature range: –40 °C to +100 °C
- Rugged stainless-steel housing; plastic sensing face
- Optical adjustment indicator, IO-Link-ready
- Resistant to oils and cooling lubricants; suitable for use outdoors

Your benefits

- Straightforward product selection as fewer sensor variants are required – one sensor suits a whole range of applications
- Stable processes thanks to extended, highly precise sensing ranges enabled through the use of the latest SICK ASIC technology
- Reduced machine downtimes thanks to longer sensor service life, even in harsh working conditions
- Quick and easy installation thanks to optical adjustment indicator and self-locking nuts
- High degree of flexibility and communication options thanks to IO-Link
- Easy to implement customer-specific variants within the standard product portfolio

IP 69K

IO-Link

Additional information

Detailed technical data C-87
Ordering information C-88
Dimensional drawings C-93
Connection diagram. C-97
Response diagram C-97
Installation note C-99
Accessories. C-99

→ www.sick.com/IMB

For more information, simply enter the link or scan the QR code and get direct access to technical data, CAD design models, operating instructions, software, application examples, and much more.

8014939/2016-08-29
Subject to change without notice

Detailed technical data

Features

	IMB08	IMB12	IMB18	IMB30
Housing	Cylindrical thread design			
Thread size	M8 x 1	M12 x 1	M18 x 1	M30 x 1.5
Sensing range S_n				
Flush	2 mm	4 mm	8 mm	15 mm
Non-flush	4 mm	8 mm	12 mm	20 mm
Installation type	Flush / non-flush (depending on type)			
Switching frequency	4,000 Hz	2,000 Hz	1,000 Hz	500 Hz
Output type	PNP / NPN (depending on type)			
Output function	NO / NC / Complementary (depending on type)			
Electrical wiring	DC 3-wire / DC 4-wire (depending on type)			
Enclosure rating	IP 68 [2], IP 69K [3]			
Special features	Resistant against coolant lubricants, Optical adjustment indicator, Capable of communication via IO-Link 1.0 (depending on type)			

[1] With gold plated contact pins.
[2] According to EN 60529.
[3] According to ISO 20653:2013-03.

Mechanics/electronics

	IMB08	IMB12	IMB18	IMB30
Supply voltage	10 V DC ... 30 V DC			
Ripple	≤ 10 %			
Voltage drop	≤ 2 V			
Current consumption	≤ 10 mA			
Hysteresis	3 % ... 20 %			
Repeatability [3] [4]	≤ 2 %			
Temperature drift (of S_r)	± 10 %			
EMC	According to EN 60947-5-2			
Continuous current I_a	≤ 200 mA			
Connection type	Cable, 2 m, PUR Male connector, M8 [5] Male connector, M12 [5] (depending on type)	Cable, 2 m, PUR Male connector, M12 [5] (depending on type)		
Short-circuit protection	✔			
Reverse polarity protection	✔			
Power-up pulse protection	✔			
Power-up pulse	–			≤ 5 ms
Shock and vibration resistance	100 g / 11 ms / 1000 cycles; 150 g / 1 Mio cycles; 10 Hz ... 55 Hz, 1 mm / 55 z ... 500 Hz / 15 g			
Ambient operating temperature	–40 °C ... +100 °C			
Housing material	Stainless steel, V2A (1.4305)			
Sensing face material	Plastic, LCP			
Tightening torque, max.	Typ. 14 Nm	Typ. 32 Nm	Typ. 90 Nm	Typ. 100 Nm
Protection class	–	II [7]		

[1] At I_a max.
[2] Without load.
[3] Ub and Ta constant.

[4] Of Sr.
[5] With gold plated contact pins.
[6] Valid if toothed side of nut is used.
[7] Reference voltage DC 50 V.

Reduction factors

	IMB08	IMB12	IMB18	IMB30
Note	The values are reference values which may vary			
Stainless steel (V2A, 304)				
Flush	Approx. 0.74	Approx. 0.65	Approx. 0.55	Approx. 0.62
Non-flush	Approx. 0.69	Approx. 0.67	Approx. 0.7	Approx. 0.78
Aluminum (Al)				
Flush	Approx. 0.43	Approx. 0.35	Approx. 0.24	Approx. 0.26
Non-flush	Approx. 0.37	Approx. 0.42	Approx. 0.43	Approx. 0.44
Copper (Cu)				
Flush	Approx. 0.33	Approx. 0.24	Approx. 0.19	Approx. 0.17
Non-flush	Approx. 0.28	Approx. 0.35	Approx. 0.37	Approx. 0.36
Brass (Br)				
Flush	Approx. 0.46	Approx. 0.38	Approx. 0.24	Approx. 0.27
Non-flush	Approx. 0.4	Approx. 0.42	Approx. 0.43	Approx. 0.46

C

Ordering information

Other models ➜ www.sick.com/IMB

IMB08

Installation type	Sensing range S_n	Housing	Connection	Output type	Output function	IO-Link	Connection diagram	Type	Part no.
Flush	2 mm	Short-body	Cable, 3-wire, 2 m, PUR	NPN	NC	–	Cd-003	IMB08-02BNOVU2K	1072700
					NO	–	Cd-001	IMB08-02BNSVU2K	1072699
				PNP	NC	–	Cd-003	IMB08-02BPOVU2K	1072698
					NO	✔	Cd-001	IMB08-02BPSVU2K	1072697
			Male connector, M8, 3-pin	NPN	NC	–	Cd-004	IMB08-02BNOVT0K	1072693
					NO	–	Cd-002	IMB08-02BNSVT0K	1072762
				PNP	NC	–	Cd-004	IMB08-02BPOVT0K	1072692
					NO	✔	Cd-002	IMB08-02BPSVT0K	1072691

Installation type	Sensing range S_n	Housing	Connection	Output type	Output function	IO-Link	Connection diagram	Type	Part no.
Flush	2 mm	Standard	Cable, 3-wire, 2 m, PUR	NPN	NC	–	Cd-003	IMB08-02BNOVU2S	1072686
					NO	–	Cd-001	IMB08-02BNSVU2S	1072685
				PNP	NC	–	Cd-003	IMB08-02BPOVU2S	1072684
					NO	✔	Cd-001	IMB08-02BPSVU2S	1072683
			Male connector, M12, 4-pin	NPN	Complementary	–	Cd-006	IMB08-02BNPVC0S	1074352
					NC	–	Cd-008	IMB08-02BNOVC0S	1072676
					NO	–	Cd-007	IMB08-02BNSVC0S	1072675
				PNP	Complementary	✔	Cd-006	IMB08-02BPPVC0S	1074349
					NC	–	Cd-008	IMB08-02BPOVC0S	1072674
					NO	✔	Cd-007	IMB08-02BPSVC0S	1072673
			Male connector, M8, 3-pin	NPN	NC	–	Cd-004	IMB08-02BNOVT0S	1072591
					NO	–	Cd-002	IMB08-02BNSVT0S	1072590
				PNP	NC	–	Cd-004	IMB08-02BPOVT0S	1072589
					NO	✔	Cd-002	IMB08-02BPSVT0S	1070168
Non-flush	4 mm	Short-body	Cable, 3-wire, 2 m, PUR	NPN	NC	–	Cd-003	IMB08-04NNOVU2K	1072703
					NO	–	Cd-001	IMB08-04NNSVU2K	1072702
				PNP	NC	–	Cd-003	IMB08-04NPOVU2K	1072454
					NO	✔	Cd-001	IMB08-04NPSVU2K	1072701
			Male connector, M8, 3-pin	NPN	NC	–	Cd-004	IMB08-04NNOVT0K	1072696
					NO	–	Cd-002	IMB08-04NNSVT0K	1070169
				PNP	NC	–	Cd-004	IMB08-04NPOVT0K	1072695
					NO	✔	Cd-002	IMB08-04NPSVT0K	1072694
		Standard	Cable, 3-wire, 2 m, PUR	NPN	NC	–	Cd-003	IMB08-04NNOVU2S	1072690
					NO	–	Cd-001	IMB08-04NNSVU2S	1072689
				PNP	NC	–	Cd-003	IMB08-04NPOVU2S	1072688
					NO	✔	Cd-001	IMB08-04NPSVU2S	1072687
			Male connector, M12, 4-pin	NPN	Complementary	–	Cd-006	IMB08-04NNPVC0S	1074353
					NC	–	Cd-008	IMB08-04NNOVC0S	1072682
					NO	–	Cd-007	IMB08-04NNSVC0S	1072681
				PNP	Complementary	✔	Cd-006	IMB08-04NPPVC0S	1074350
					NC	–	Cd-008	IMB08-04NPOVC0S	1072678
					NO	✔	Cd-007	IMB08-04NPSVC0S	1070170
			Male connector, M8, 3-pin	NPN	NC	–	Cd-004	IMB08-04NNOVT0S	1072671
					NO	–	Cd-002	IMB08-04NNSVT0S	1072594
				PNP	NC	–	Cd-004	IMB08-04NPOVT0S	1072593
					NO	✔	Cd-002	IMB08-04NPSVT0S	1072592

C

C

IMB12

Installation type	Sensing range S_n	Housing	Connection	Output type	Output function	IO-Link	Connection diagram	Type	Part no.
Flush	4 mm	Short-body	Cable, 3-wire, 2 m, PUR	NPN	NC	–	Cd-003	IMB12-04BNOVU2K	1072757
					NO	–	Cd-001	IMB12-04BNSVU2K	1072756
				PNP	NC	–	Cd-003	IMB12-04BPOVU2K	1072755
					NO	✔	Cd-001	IMB12-04BPSVU2K	1072754
			Male connector, M12, 4-pin	NPN	Complementary	–	Cd-006	IMB12-04BNPVC0K	1074367
					NC	–	Cd-008	IMB12-04BNOVC0K	1072749
					NO	–	Cd-007	IMB12-04BNSVC0K	1070172
				PNP	Complementary	✔	Cd-006	IMB12-04BPPVC0K	1074366
					NC	–	Cd-008	IMB12-04BPOVC0K	1072748
					NO	✔	Cd-007	IMB12-04BPSVC0K	1072747
		Standard	Cable, 3-wire, 2 m, PUR	NPN	NC	–	Cd-003	IMB12-04BNOVU2S	1072742
					NO	–	Cd-001	IMB12-04BNSVU2S	1072741
				PNP	NC	–	Cd-003	IMB12-04BPOVU2S	1072765
					NO	✔	Cd-001	IMB12-04BPSVU2S	1072455
			Male connector, M12, 4-pin	NPN	Complementary	–	Cd-006	IMB12-04BNPVC0S	1074361
					NC	–	Cd-008	IMB12-04BNOVC0S	1072738
					NO	–	Cd-007	IMB12-04BNSVC0S	1072737
				PNP	Complementary	✔	Cd-006	IMB12-04BPPVC0S	1074359
					NC	–	Cd-008	IMB12-04BPOVC0S	1072736
					NO	✔	Cd-007	IMB12-04BPSVC0S	1072763
Non-flush	8 mm	Short-body	Cable, 3-wire, 2 m, PUR	NPN	NC	–	Cd-003	IMB12-08NNOVU2K	1072761
					NO	–	Cd-001	IMB12-08NNSVU2K	1072760
				PNP	NC	–	Cd-003	IMB12-08NPOVU2K	1072759
					NO	✔	Cd-001	IMB12-08NPSVU2K	1072758
			Male connector, M12, 4-pin	NPN	Complementary	–	Cd-006	IMB12-08NNPVC0K	1076280
					NC	–	Cd-008	IMB12-08NNOVC0K	1072753
					NO	–	Cd-007	IMB12-08NNSVC0K	1072752
				PNP	Complementary	✔	Cd-006	IMB12-08NPPVC0K	1076279
					NC	–	Cd-008	IMB12-08NPOVC0K	1072751
					NO	✔	Cd-007	IMB12-08NPSVC0K	1072750
		Standard	Cable, 3-wire, 2 m, PUR	NPN	NC	–	Cd-003	IMB12-08NNOVU2S	1072746
					NO	–	Cd-001	IMB12-08NNSVU2S	1072745
				PNP	NC	–	Cd-003	IMB12-08NPOVU2S	1072744
					NO	✔	Cd-001	IMB12-08NPSVU2S	1072743
			Male connector, M12, 4-pin	NPN	Complementary	–	Cd-006	IMB12-08NNPVC0S	1074362
					NC	–	Cd-008	IMB12-08NNOVC0S	1072740
					NO	–	Cd-007	IMB12-08NNSVC0S	1072764
				PNP	Complementary	✔	Cd-006	IMB12-08NPPVC0S	1074360
					NC	–	Cd-008	IMB12-08NPOVC0S	1072739
					NO	✔	Cd-007	IMB12-08NPSVC0S	1070171

8014939/2016-08-29
Subject to change without notice

IMB18

Installation type	Sensing range S_n	Housing	Connection	Output type	Output function	IO-Link	Connection diagram	Type	Part no.
Flush	8 mm	Short-body	Cable, 3-wire, 2 m, PUR	NPN	NC	–	Cd-003	IMB18-08BNOVU2K	1072830
					NO	–	Cd-001	IMB18-08BNSVU2K	1072829
				PNP	NC	–	Cd-003	IMB18-08BPOVU2K	1072456
					NO	✔	Cd-001	IMB18-08BPSVU2K	1072828
			Male connector, M12, 4-pin	NPN	Complementary	–	Cd-006	IMB18-08BNPVC0K	1074378
					NC	–	Cd-008	IMB18-08BNOVC0K	1072823
					NO	–	Cd-007	IMB18-08BNSVC0K	1070174
				PNP	Complementary	✔	Cd-006	IMB18-08BPPVC0K	1074376
					NC	–	Cd-008	IMB18-08BPOVC0K	1072822
					NO	✔	Cd-007	IMB18-08BPSVC0K	1072821
		Standard	Cable, 3-wire, 2 m, PUR	NPN	NC	–	Cd-003	IMB18-08BNOVU2S	1072816
					NO	–	Cd-001	IMB18-08BNSVU2S	1072815
				PNP	NC	–	Cd-003	IMB18-08BPOVU2S	1072814
					NO	✔	Cd-001	IMB18-08BPSVU2S	1072813
			Male connector, M12, 4-pin	NPN	Complementary	–	Cd-006	IMB18-08BNPVC0S	1074371
					NC	–	Cd-008	IMB18-08BNOVC0S	1072809
					NO	–	Cd-007	IMB18-08BNSVC0S	1072808
				PNP	Complementary	✔	Cd-006	IMB18-08BPPVC0S	1074369
					NC	–	Cd-008	IMB18-08BPOVC0S	1072807
					NO	✔	Cd-007	IMB18-08BPSVC0S	1072806
Non-flush	12 mm	Short-body	Cable, 3-wire, 2 m, PUR	NPN	NC	–	Cd-003	IMB18-12NNOVU2K	1072834
					NO	–	Cd-001	IMB18-12NNSVU2K	1072833
				PNP	NC	–	Cd-003	IMB18-12NPOVU2K	1072832
					NO	✔	Cd-001	IMB18-12NPSVU2K	1072831
			Male connector, M12, 4-pin	NPN	Complementary	–	Cd-006	IMB18-12NNPVC0K	1074379
					NO	–	Cd-007	IMB18-12NNSVC0K	1072826
				PNP	Complementary	✔	Cd-006	IMB18-12NPPVC0K	1074377
					NC	–	Cd-008	IMB18-12NPOVC0K	1072825
					NO	✔	Cd-007	IMB18-12NPSVC0K	1072824
		Standard	Cable, 3-wire, 2 m, PUR	NPN	NC	–	Cd-003	IMB18-12NNOVU2S	1072820
					NO	–	Cd-001	IMB18-12NNSVU2S	1072819
				PNP	NC	–	Cd-003	IMB18-12NPOVU2S	1072818
					NO	✔	Cd-001	IMB18-12NPSVU2S	1072817
			Male connector, M12, 4-pin	NPN	Complementary	–	Cd-006	IMB18-12NNPVC0S	1074372
					NC	–	Cd-008	IMB18-12NNOVC0S	1072812
					NO	–	Cd-007	IMB18-12NNSVC0S	1072811
				PNP	Complementary	✔	Cd-006	IMB18-12NPPVC0S	1074370
					NC	–	Cd-008	IMB18-12NPOVC0S	1072810
					NO	✔	Cd-007	IMB18-12NPSVC0S	1070173

C

C

IMB30

Installation type	Sensing range S_n	Housing	Connection	Output type	Output function	IO-Link	Connection diagram	Type	Part no.
Flush	15 mm	Short-body	Cable, 3-wire, 2 m, PUR	NPN	NC	–	Cd-003	IMB30-15BNOVU2K	1072858
					NO	–	Cd-001	IMB30-15BNSVU2K	1072857
				PNP	NC	–	Cd-003	IMB30-15BPOVU2K	1072856
					NO	✔	Cd-001	IMB30-15BPSVU2K	1072457
			Male connector, M12, 4-pin	NPN	Complementary	–	Cd-006	IMB30-15BNPVC0K	1074417
					NC	–	Cd-008	IMB30-15BNOVC0K	1072851
					NO	–	Cd-007	IMB30-15BNSVC0K	1072850
				PNP	Complementary	✔	Cd-006	IMB30-15BPPVC0K	1074406
					NC	–	Cd-008	IMB30-15BPOVC0K	1072849
					NO	✔	Cd-007	IMB30-15BPSVC0K	1070176
		Standard	Cable, 3-wire, 2 m, PUR	NPN	NC	–	Cd-003	IMB30-15BNOVU2S	1072844
					NO	–	Cd-001	IMB30-15BNSVU2S	1072843
				PNP	NC	–	Cd-003	IMB30-15BPOVU2S	1072842
					NO	✔	Cd-001	IMB30-15BPSVU2S	1072841
			Male connector, M12, 4-pin	NPN	Complementary	–	Cd-006	IMB30-15BNPVC0S	1074408
					NC	–	Cd-008	IMB30-15BNOVC0S	1072837
					NO	–	Cd-007	IMB30-15BNSVC0S	1072836
				PNP	Complementary	✔	Cd-006	IMB30-15BPPVC0S	1074411
					NC	–	Cd-008	IMB30-15BPOVC0S	1072835
					NO	✔	Cd-007	IMB30-15BPSVC0S	1072602
Non-flush	20 mm	Short-body	Cable, 3-wire, 2 m, PUR	NPN	NC	–	Cd-003	IMB30-20NNOVU2K	1072862
					NO	–	Cd-001	IMB30-20NNSVU2K	1072861
				PNP	NC	–	Cd-003	IMB30-20NPOVU2K	1072860
					NO	✔	Cd-001	IMB30-20NPSVU2K	1072859
			Male connector, M12, 4-pin	NPN	Complementary	–	Cd-006	IMB30-20NNPVC0K	1074418
					NC	–	Cd-008	IMB30-20NNOVC0K	1072855
					NO	–	Cd-007	IMB30-20NNSVC0K	1072854
				PNP	Complementary	✔	Cd-006	IMB30-20NPPVC0K	1074416
					NC	–	Cd-008	IMB30-20NPOVC0K	1072853
					NO	✔	Cd-007	IMB30-20NPSVC0K	1072852
		Standard	Cable, 3-wire, 2 m, PUR	NPN	NC	–	Cd-003	IMB30-20NNOVU2S	1072848
					NO	–	Cd-001	IMB30-20NNSVU2S	1072847
				PNP	NC	–	Cd-003	IMB30-20NPOVU2S	1072846
					NO	✔	Cd-001	IMB30-20NPSVU2S	1072845
			Male connector, M12, 4-pin	NPN	Complementary	–	Cd-006	IMB30-20NNPVC0S	1074409
					NC	–	Cd-008	IMB30-20NNOVC0S	1072840
					NO	–	Cd-007	IMB30-20NNSVC0S	1070175
				PNP	Complementary	✔	Cd-006	IMB30-20NPPVC0S	1074407
					NC	–	Cd-008	IMB30-20NPOVC0S	1072839
					NO	✔	Cd-007	IMB30-20NPSVC0S	1072838

8014939/2016-08-29

Subject to change without notice

Dimensional drawings (Dimensions in mm (inch))

IMB08 Standard, cable, flush

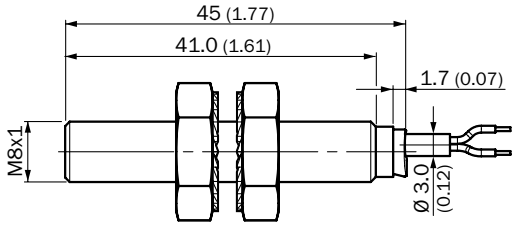

IMB08 Standard, connector, M8, flush

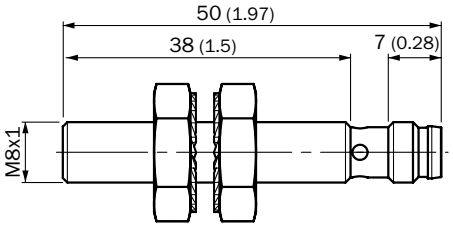

IMB08 Standard, connector, M12, flush

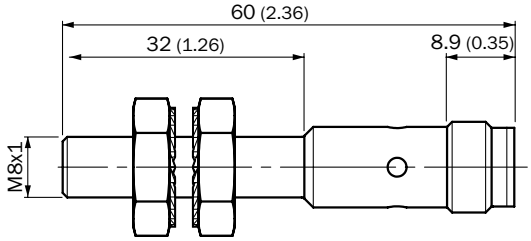

IMB08 Standard, cable, non-flush

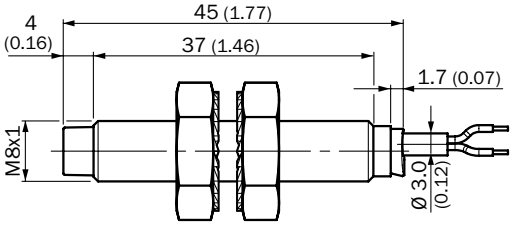

IMB08 Standard, connector M8, non-flush

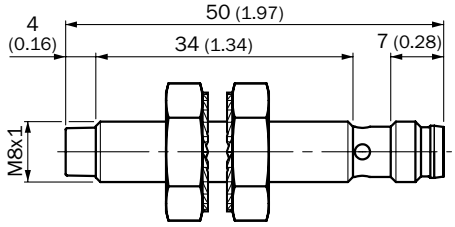

IMB08 Standard, connector M12, non-flush

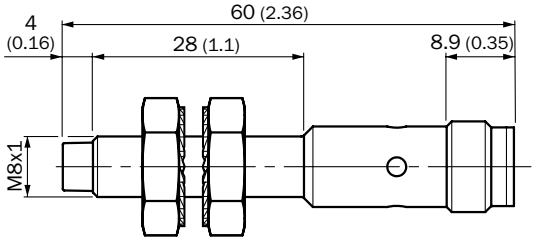

IMB08 Short-body housing, cable, flush

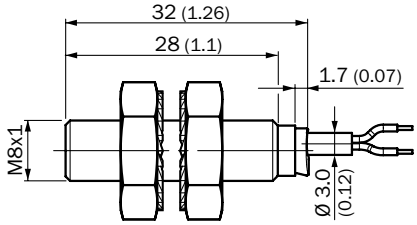

IMB08 Short-body housing, connector M8, flush

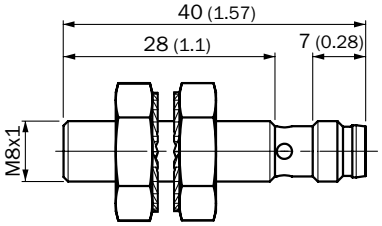

IMB08 Short-body housing, cable, non-flush

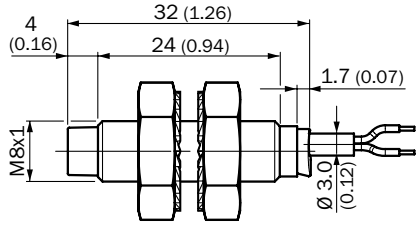

IMB08 Short-body housing, connector M8, non-flush

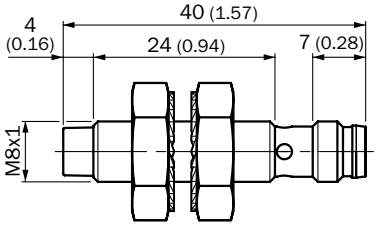

C

C

IMB12 standard, cable, flush

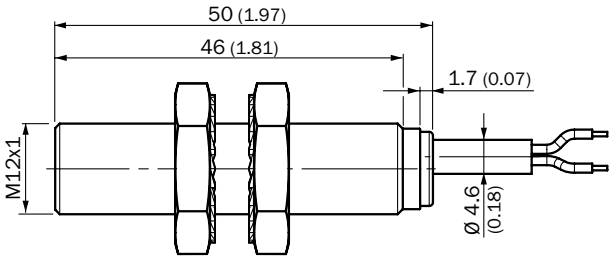

IMB12 Standard, connector, M12, flush

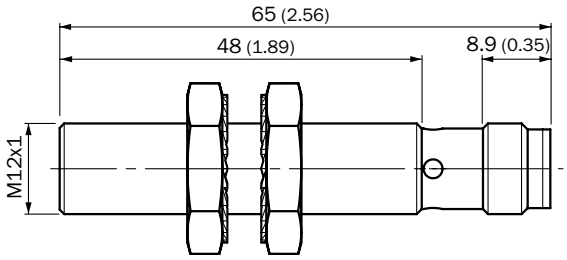

IMB12 Standard, cable, non-flush

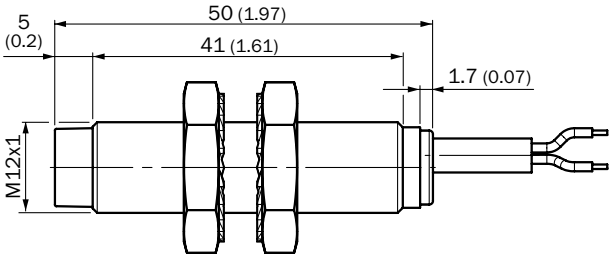

IMB12 Standard, connector M12, non-flush

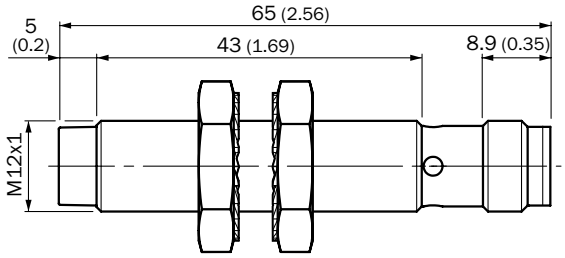

IMB12 Short-body housing, cable, flush

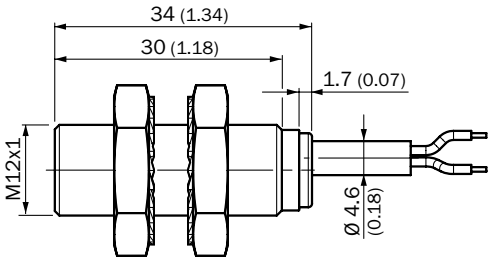

IMB12 Short-body housing, connector M12, flush

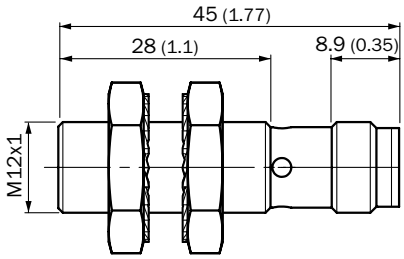

IMB12 Short-body housing, cable, non-flush

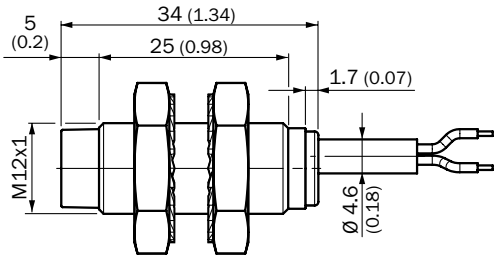

IMB12 Short-body housing, connector M12, non-flush

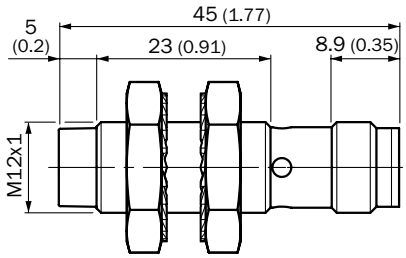

IMB18 Short-body housing, cable, flush

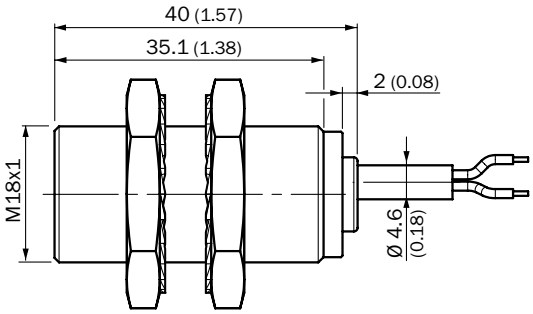

IMB18 Short-body housing, connector M12, flush

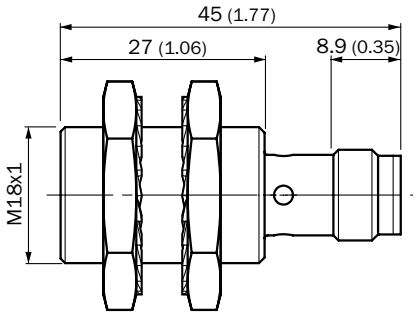

IMB18 Standard, cable, flush

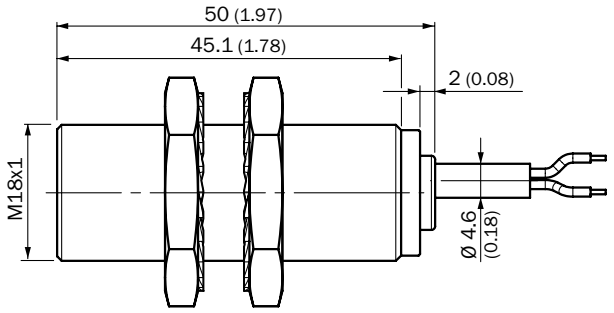

IMB18 Standard, connector M12, non-flush

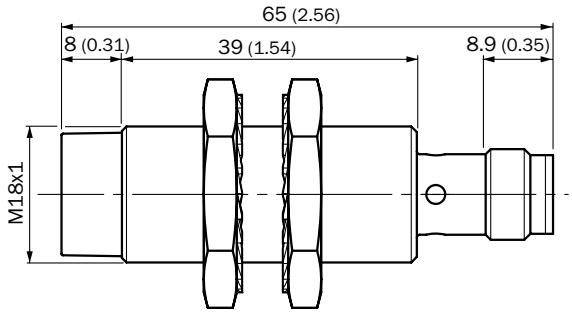

IMB18 Standard, cable, non-flush

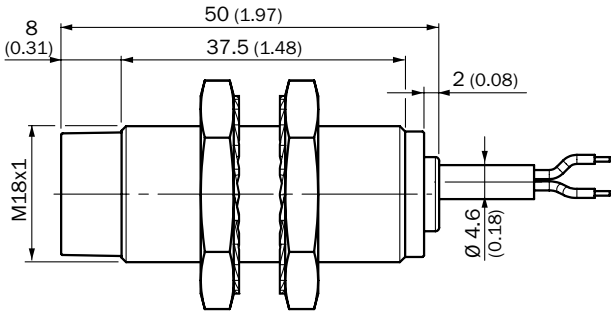

IMB18 Standard, connector, M12, flush

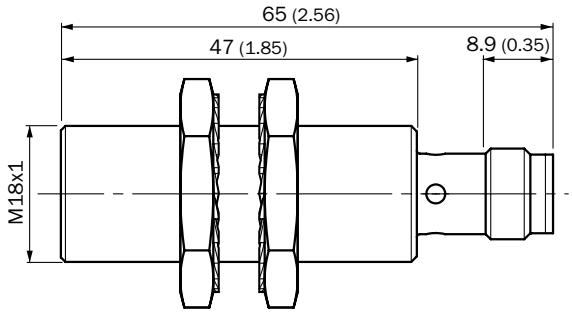

IMB18 Short-body housing, cable, non-flush

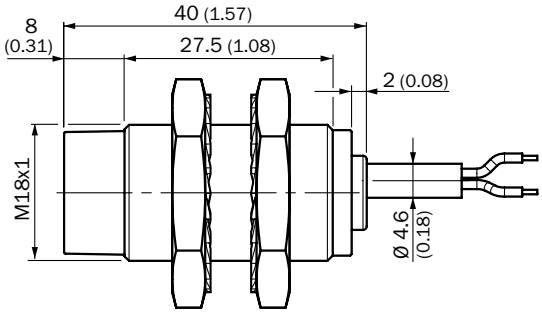

IMB18 Short-body housing, connector M12, non-flush

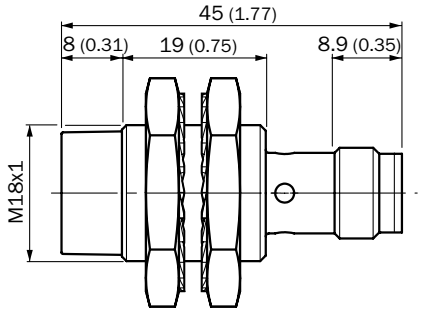

IMB30 Standard, cable, flush

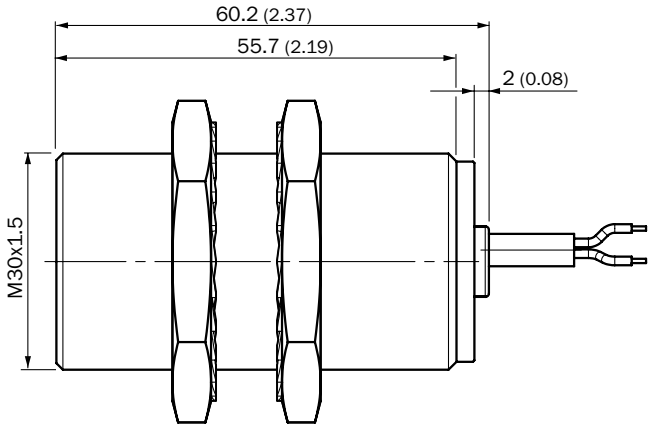

IMB30 Standard, connector, M12, flush

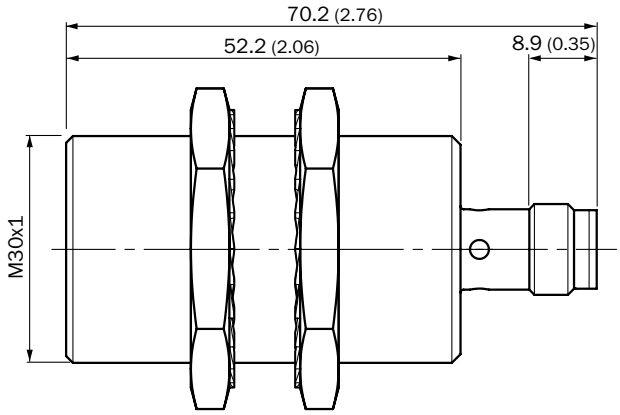

C

C

IMB30 Standard, cable, non-flush

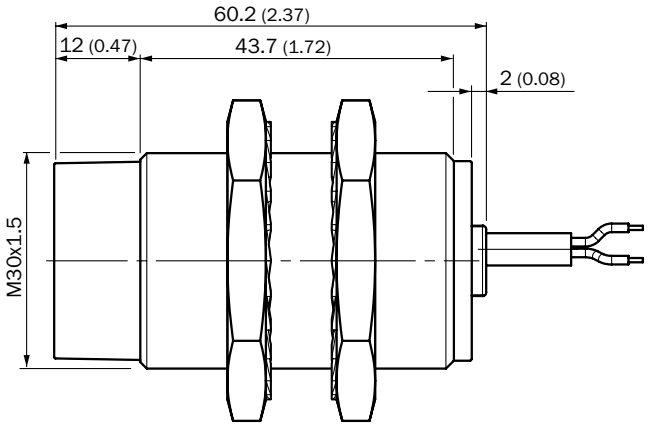

IMB30 Standard, connector M12, non-flush

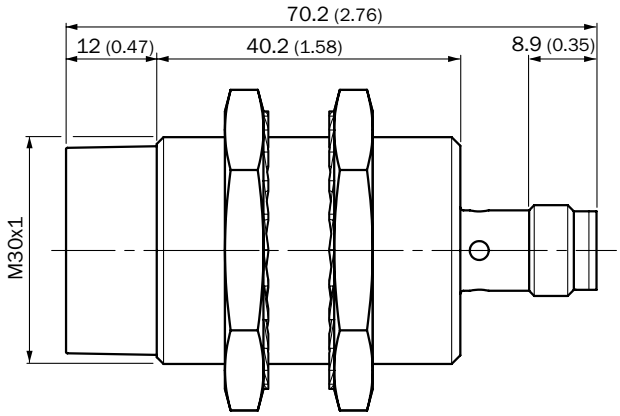

IMB30 Short-body housing, cable, flush

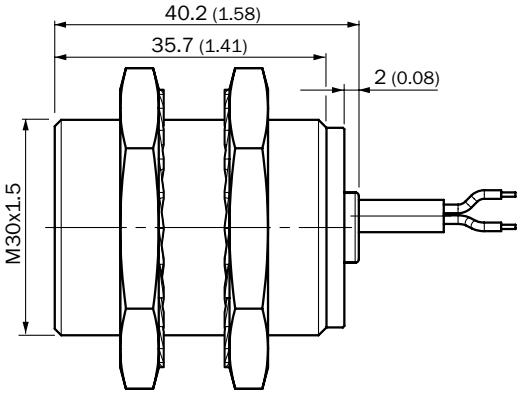

IMB30 Short-body housing, connector M12, flush

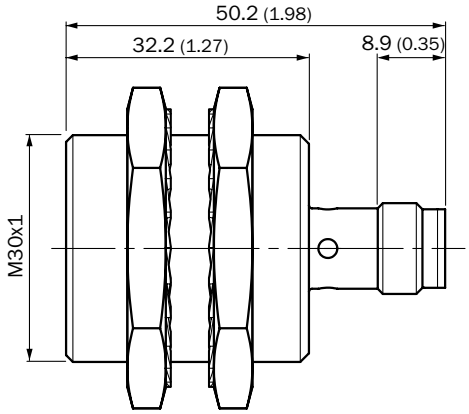

IMB30 Short-body housing, cable, non-flush

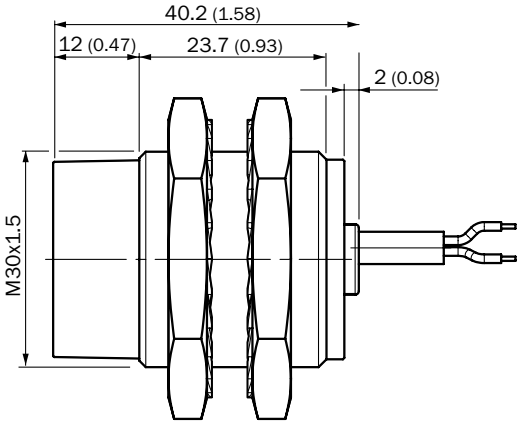

IMB30 Short-body housing, connector M12, non-flush

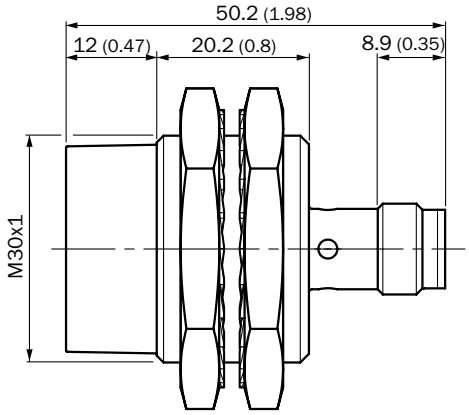

Connection diagram

Cd-001

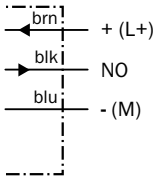

Cd-002

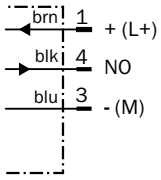

Cd-003

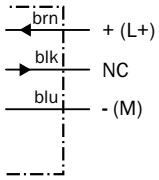

Cd-004

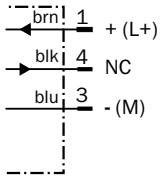

Cd-006

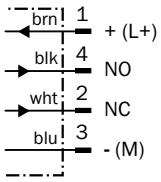

Cd-007

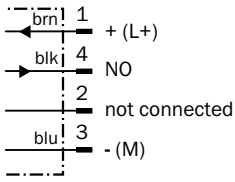

Cd-008

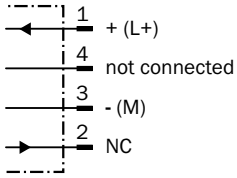

Response diagram

IMB08, flush installation

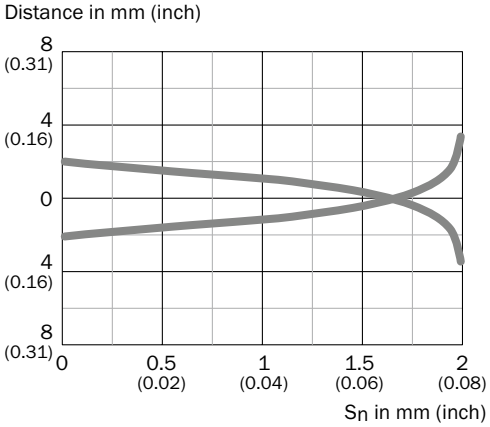

IMB08, non-flush installation

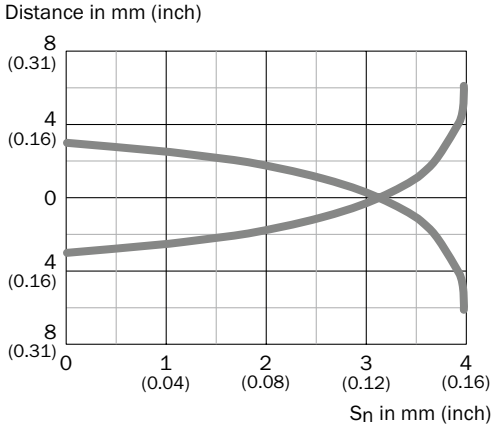

C

IMB12, flush installation

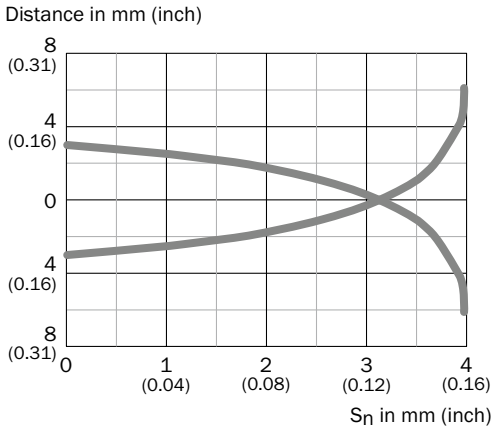

IMB12, non-flush installation

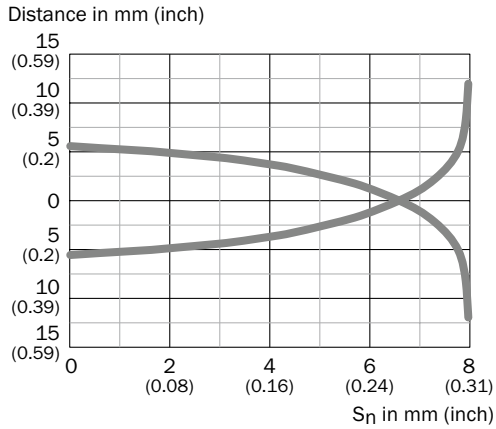

IMB18, flush installation

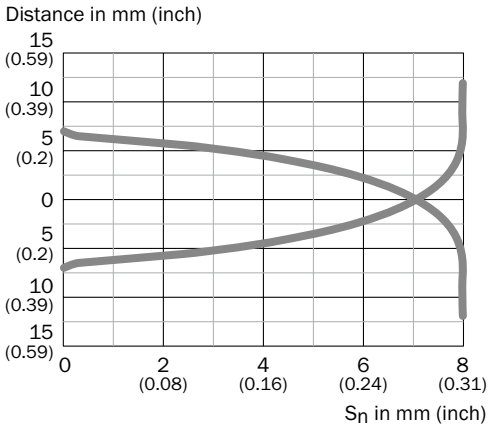

IMB18, non-flush installation

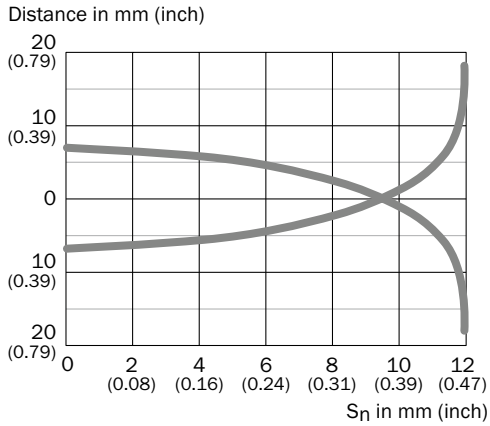

IMB30, flush installation

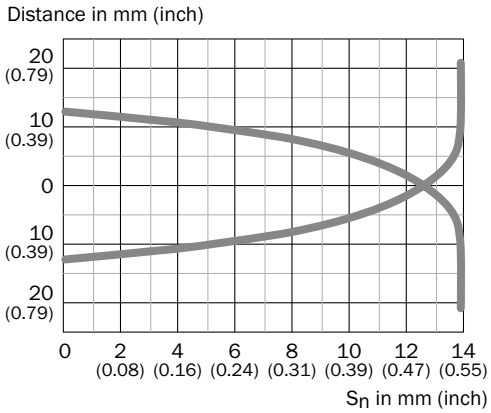

IMB30, non-flush installation

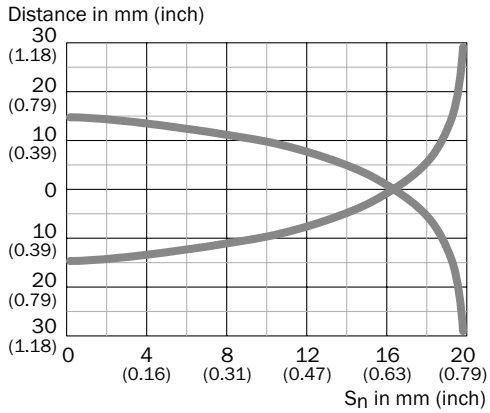

Installation note

Flush installation

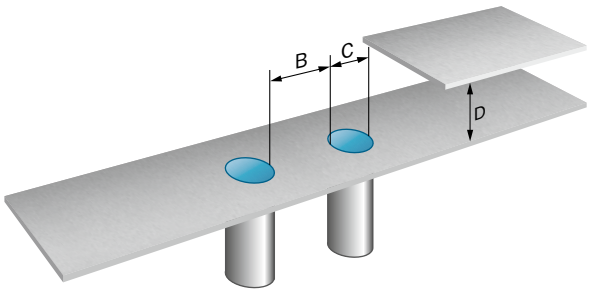

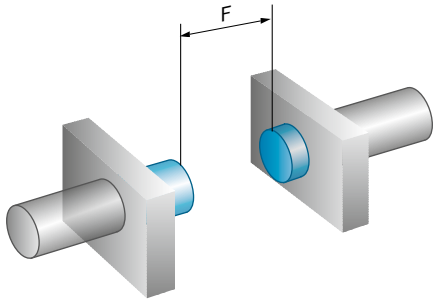

Quasi-flush / non-flush installation

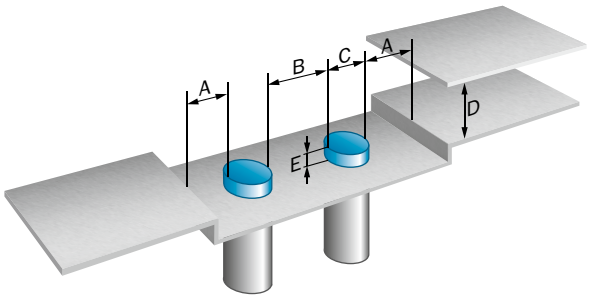

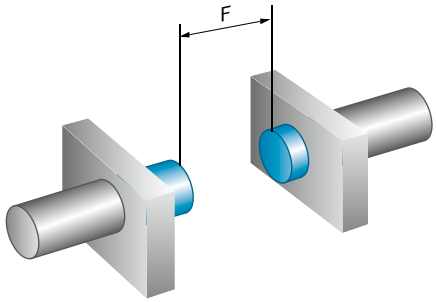

C

	Sensing range Sn	Installation type	A	B	C	D	E	F
IMB08-02Bxxxxxx	2 mm	Flush	-	6,5 mm	8 mm	6 mm	-	16 mm
IMB08-04Nxxxxxx	4 mm	Non-flush	8 mm	18 mm	8 mm	12 mm	8 mm	32 mm
IMB12-04Bxxxxxx	4 mm	Flush	-	12 mm	12 mm	12 mm	-	32 mm
IMB12-08Nxxxxxx	8 mm	Non-flush	12 mm	24 mm	12 mm	24 mm	16 mm	64 mm
IMB18-08Bxxxxxx	8 mm	Flush	9 mm	18 mm	18 mm	24 mm	2 mm	64 mm
IMB18-12Nxxxxxx	12 mm	Non-flush	18 mm	36 mm	18 mm	34 mm	12 mm	96 mm
IMB30-15Bxxxxxx	15 mm	Flush	-	40 mm	30 mm	45 mm	-	120 mm
IMB30-20Nxxxxxx	20 mm	Non-flush	20 mm	62 mm	30 mm	60 mm	20 mm	160 mm

Accessories

Figure	Accessory	Page
	Plug connectors and cables	➜ H-267
	Mounting systems	➜ H-258
	Further accessories	➜ H-280

THE ECONOMIC STANDARD FOR USE IN THE FOOD INDUSTRY

C

Product description

The IMF inductive proximity sensor is the new standard for reliability in the food industry. With its extended sensing ranges, made highly precise thanks to the use of SICK ASIC technology, the IMF ensures reliable, stable processes. What's more, its wide-ranging specification limits allow the IMF to be used in all areas of food production: a huge benefit when it comes to product selection and warehousing. The optical adjustment indicator saves time during commissioning and helps cut down on errors. Communication via IO-Link is also possible, creating more flexibility and adding more functions for automation applications. With an extensive standard product portfolio available, even special devices can be put into action quickly and easily.

At a glance

- Types: M8 to M30
- Extended sensing ranges: 2 mm to 20 mm
- Electrical configuration: DC 3- and 4-wire
- Enclosure rating: IP 68, IP 69K
- Temperature range: –40 °C to +100 °C
- Food-compatible stainless-steel housing, plastic sensing face
- Optical adjustment indicator, IO-Link-ready
- Resistant to industrial cleaning agents, Ecolab-certified

Your benefits

- Reliable processes thanks to extended, highly accurate sensing ranges enabled through the use of SICK ASIC technology
- Reduced machine downtimes thanks to a longer service life, even when subjected to frequent cleaning cycles
- Quick and easy installation thanks to the optical adjustment indicator
- High degree of flexibility and communication options thanks to IO-Link
- Easy to implement customer-specific variants thanks to a modular concept

IO-Link

ECOLAB

Additional information

Detailed technical data C-101
Ordering information C-102
Dimensional drawings C-103
Connection diagram C-104
Response diagram C-105
Installation note C-106
Accessories C-107

→ www.sick.com/IMF

For more information, simply enter the link or scan the QR code and get direct access to technical data, CAD design models, operating instructions, software, application examples, and much more.

8014939/2016-08-29
Subject to change without notice

Detailed technical data

Features

	IMF08	IMF12	IMF18	IMF30
Housing	Cylindrical thread design			
Thread size	M8 x 1	M12 x 1	M18 x 1	M30 x 1.5
Sensing range S_n				
Flush	2 mm	4 mm	8 mm	15 mm
Non-flush	4 mm	8 mm	12 mm	20 mm
Installation type	Flush / non-flush (depending on type)			
Switching frequency	4,000 Hz	2,000 Hz	1,000 Hz	500 Hz
Connection type [1]	Male connector M12, 4-pin			
Output type	NPN / PNP (depending on type)			
Output function	NO / NC / Complementary (depending on type)			
Electrical wiring	DC 3-wire / DC 4-wire (depending on type)			
Enclosure rating	IP 68 [2], IP 69K [3]			
Special features	Suitable for use in the food industry, Resistant to cleaning agents Capable of communication via IO-Link 1.0 (depending on type)			

[1] With gold plated contact pins.
[2] According to EN 60529.
[3] According to ISO 20653:2013-03.

Mechanics/electronics

	IMF08	IMF12	IMF18	IMF30
Supply voltage	10 V DC ... 30 V DC			
Ripple	≤ 10 %			
Voltage drop	≤ 2 V			
Current consumption [2]	≤ 10 mA			
Hysteresis	3 % ... 20 %			
Repeatability [3] [4]	≤ 2 %			
Temperature drift (of S_r)	± 10 %			
EMC	According to EN 60947-5-2			
Continuous current I_a	≤ 200 mA			
Connection type [5]	Male connector, M12			
Short-circuit protection	✔			
Reverse polarity protection	✔			
Power-up pulse protection	✔			
Power-up pulse	–			≤ 5 ms
Shock and vibration resistance	100 g / 11 ms / 1000 cycles; 150 g / 1 Mio cycles; 10 Hz ... 55 Hz, 1 mm / 55 z ... 500 Hz / 15 g	100 g / 2 ms / 500 cycles; 150 g / 1 Mio cycles; 10 Hz ... 55 Hz / 1 mm; 55 Hz ... 500 Hz / 60 g		
Ambient operating temperature	–40 °C ... +100 °C			
Housing material	Stainless steel, V4A (1.4404, AISI 316L)			
Sensing face material	Plastic, LCP (FDA certified)			
Tightening torque, max.	Typ. 14 Nm	Typ. 32 Nm	Typ. 90 Nm	Typ. 100 Nm
Protection class	–	II [6]		

[1] At I_a max.
[2] Without load.
[3] Ub and Ta constant.

C

[4] Of Sr.
[5] With gold plated contact pins.
[6] Reference voltage DC 50 V.

Reduction factors

	IMF08	IMF12	IMF18	IMF30
Note	The values are reference values which may vary			
Stainless steel (V2A, 304)				
Flush	Approx. 0.74	Approx. 0.65	Approx. 0.55	Approx. 0.62
Non-flush	Approx. 0.69	Approx. 0.67	Approx. 0.7	Approx. 0.78
Aluminum (Al)				
Flush	Approx. 0.43	Approx. 0.35	Approx. 0.24	Approx. 0.26
Non-flush	Approx. 0.37	Approx. 0.42	Approx. 0.43	Approx. 0.44
Copper (Cu)				
Flush	Approx. 0.33	Approx. 0.24	Approx. 0.19	Approx. 0.17
Non-flush	Approx. 0.28	Approx. 0.35	Approx. 0.37	Approx. 0.36
Brass (Br)				
Flush	Approx. 0.46	Approx. 0.38	Approx. 0.24	Approx. 0.27
Non-flush	Approx. 0.4	Approx. 0.42	Approx. 0.43	Approx. 0.46

C

Ordering information

Other models ➜ www.sick.com/IMF

IMF08

- **Connection:** male connector, M12, 4-pin

Installation type	Sensing range S_n	Electrical wiring	Output type	Output function	IO-Link	Connection diagram	Type	Part no.
Flush	2 mm	DC 3-wire	NPN	NO	–	Cd-007	IMF08-02BNSNC0S	1076749
			PNP	NC	–	Cd-008	IMF08-02BPONC0S	1076747
				NO	✔	Cd-007	IMF08-02BPSNC0S	1076745
		DC 4-wire	PNP	Complementary	✔	Cd-006	IMF08-02BPPNC0S	1076748
Non-flush	4 mm	DC 3-wire	NPN	NO	–	Cd-007	IMF08-04NNSNC0S	1076753
			PNP	NC	–	Cd-008	IMF08-04NPONC0S	1076751
				NO	✔	Cd-007	IMF08-04NPSNC0S	1076750
		DC 4-wire	PNP	Complementary	✔	Cd-006	IMF08-04NPPNC0S	1076752

IMF12

- **Connection:** male connector, M12, 4-pin

Installation type	Sensing range S_n	Electrical wiring	Output type	Output function	IO-Link	Connection diagram	Type	Part no.
Flush	4 mm	DC 3-wire	NPN	NO	–	Cd-007	IMF12-04BNSNC0S	1076671
			PNP	NC	–	Cd-008	IMF12-04BPONC0S	1076670
				NO	✔	Cd-007	IMF12-04BPSNC0S	1076673
		DC 4-wire	PNP	Complementary	✔	Cd-006	IMF12-04BPPNC0S	1076674
Non-flush	8 mm	DC 3-wire	NPN	NO	–	Cd-007	IMF12-08NNSNC0S	1076677
			PNP	NC	–	Cd-008	IMF12-08NPONC0S	1076676
				NO	✔	Cd-007	IMF12-08NPSNC0S	1076675
		DC 4-wire	PNP	Complementary	–	Cd-006	IMF12-08NPPNC0S	1076678

IMF18

- **Connection:** male connector, M12, 4-pin

Installation type	Sensing range S_n	Electrical wiring	Output type	Output function	IO-Link	Connection diagram	Type	Part no.
Flush	8 mm	DC 3-wire	NPN	NO	–	Cd-007	IMF18-08BNSNC0S	1076664
			PNP	NC	–	Cd-008	IMF18-08BPONC0S	1076663
				NO	✔	Cd-007	IMF18-08BPSNC0S	1076662
		DC 4-wire	PNP	Complementary	✔	Cd-006	IMF18-08BPPNC0S	1076665
Non-flush	12 mm	DC 3-wire	NPN	NO	–	Cd-007	IMF18-12NNSNC0S	1076668
			PNP	NC	–	Cd-008	IMF18-12NPONC0S	1076667
				NO	✔	Cd-007	IMF18-12NPSNC0S	1076666
		DC 4-wire	PNP	Complementary	✔	Cd-006	IMF18-12NPPNC0S	1076669

C

IMF30

- **Connection:** male connector, M12, 4-pin

Installation type	Sensing range S_n	Electrical wiring	Output type	Output function	IO-Link	Connection diagram	Type	Part no.
Flush	15 mm	DC 3-wire	NPN	NO	–	Cd-007	IMF30-15BNSNC0S	1076657
			PNP	NC	–	Cd-008	IMF30-15BPONC0S	1076654
				NO	✔	Cd-007	IMF30-15BPSNC0S	1076653
		DC 4-wire	PNP	Complementary	✔	Cd-006	IMF30-15BPPNC0S	1076656
Non-flush	20 mm	DC 3-wire	NPN	NO	–	Cd-007	IMF30-20NNSNC0S	1076661
			PNP	NC	–	Cd-008	IMF30-20NPONC0S	1076659
				NO	✔	Cd-007	IMF30-20NPSNC0S	1076658
		DC 4-wire	PNP	Complementary	✔	Cd-006	IMF30-20NPPNC0S	1076660

Dimensional drawings (Dimensions in mm (inch))

IMF08, flush

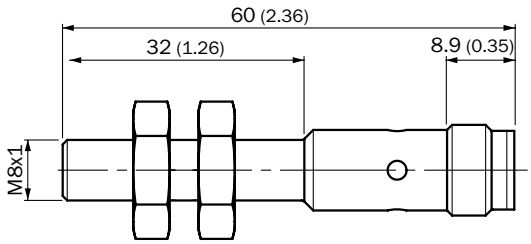

IMF08, non flush

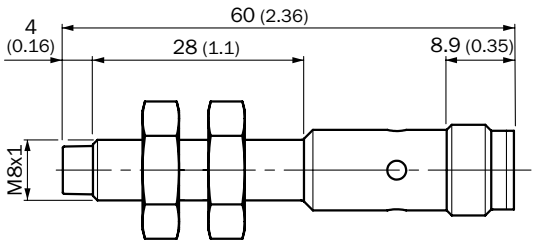

IMF12, flush

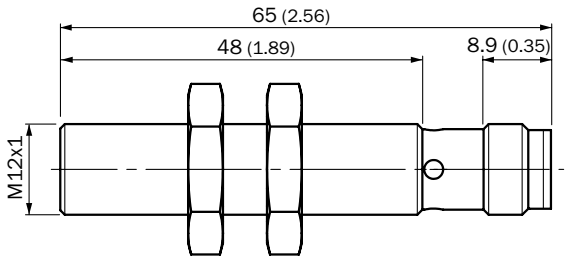

IMF12, non flush

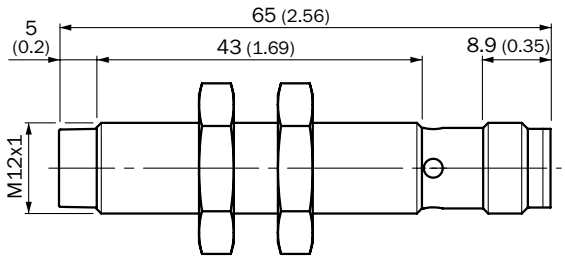

IMF18, flush

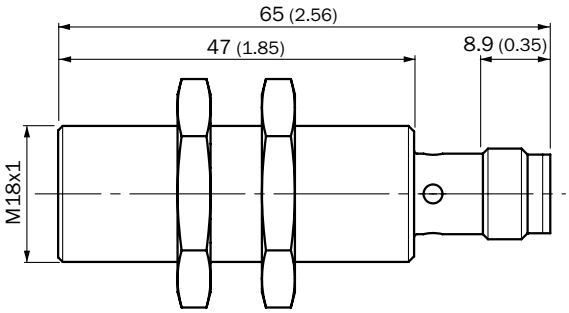

IMF18, non flush

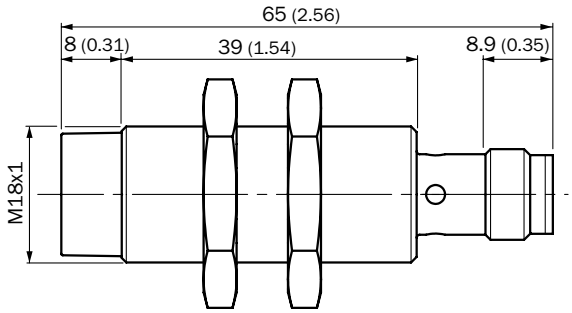

C

IMF30, flush

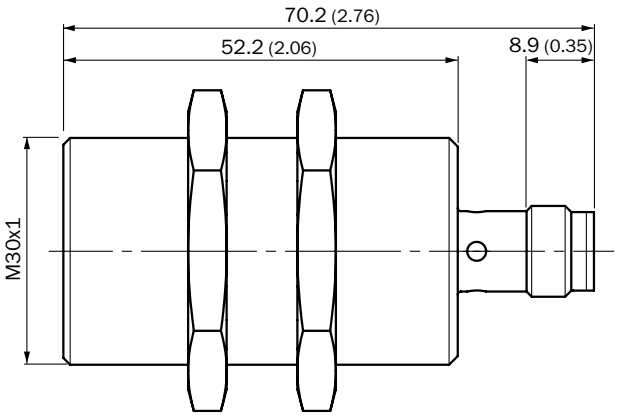

IMF30, non flush

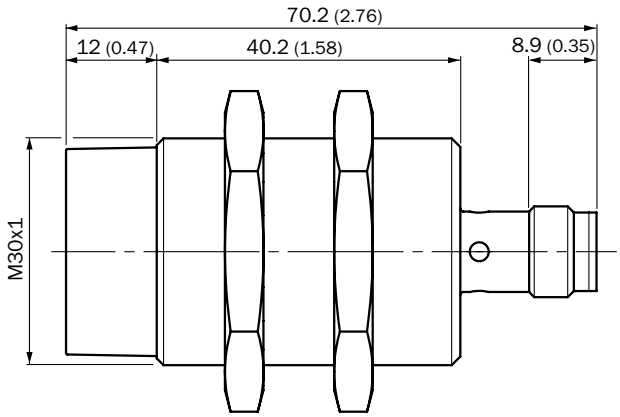

Connection diagram

Cd-006

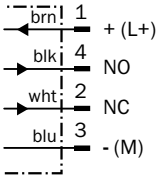

Cd-007

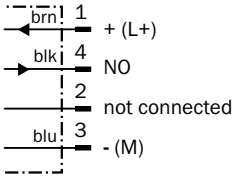

Cd-008

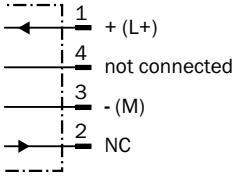

Response diagram

IMF08, flush installation

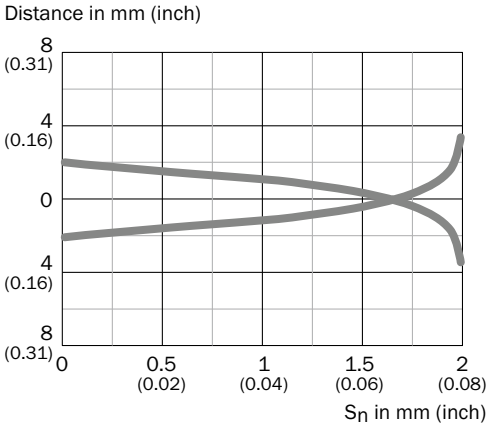

IMF08, non-flush installation

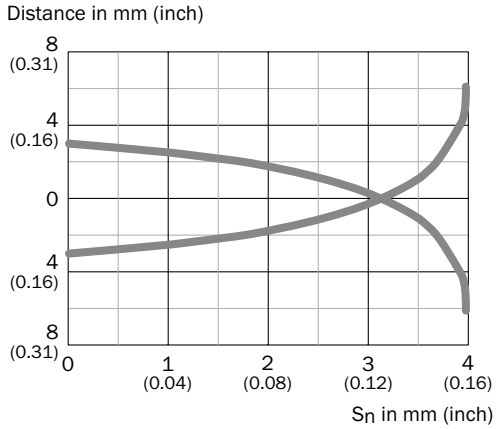

IMF12, flush installation

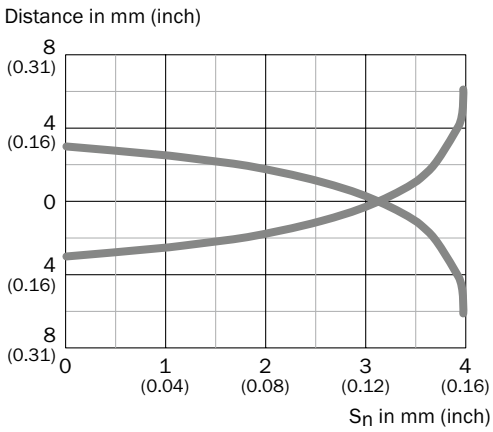

IMF12, non-flush installation

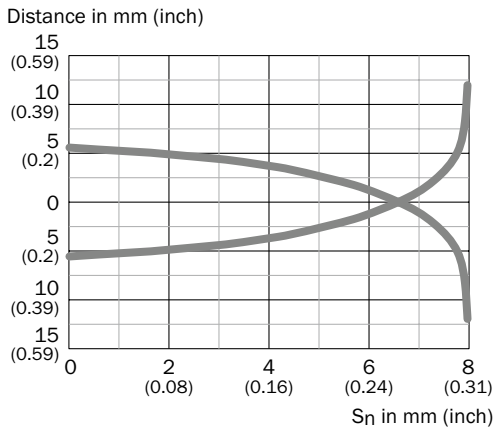

IMF18, flush installation

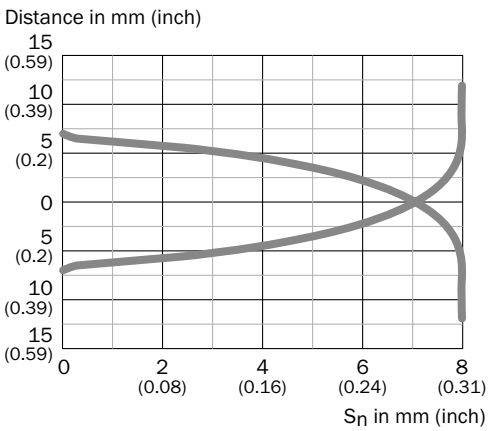

IMF18, non-flush installation

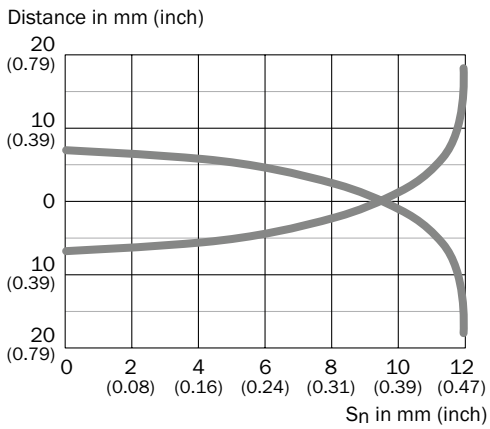

C

IMF30, flush installation

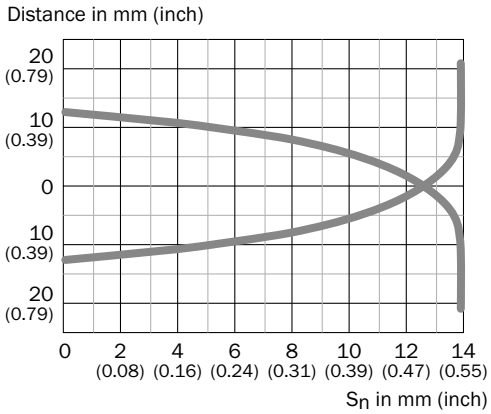

IMF30, non-flush installation

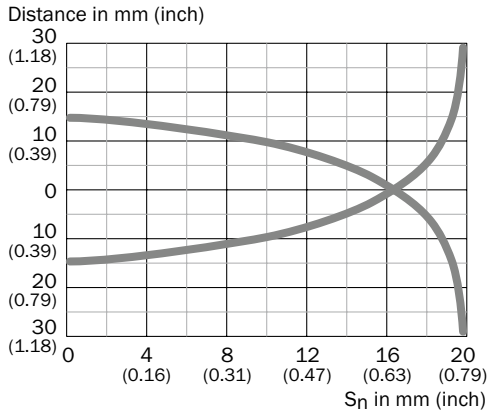

C

Installation note

Flush installation

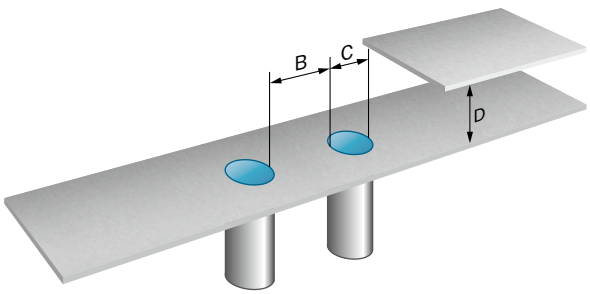

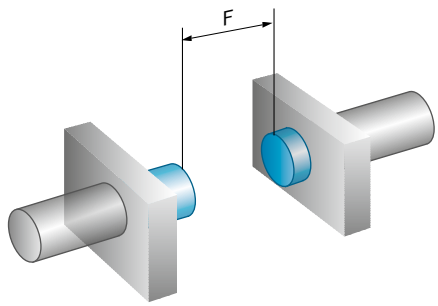

Non-flush installation

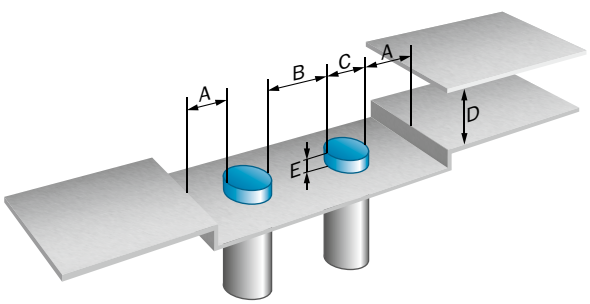

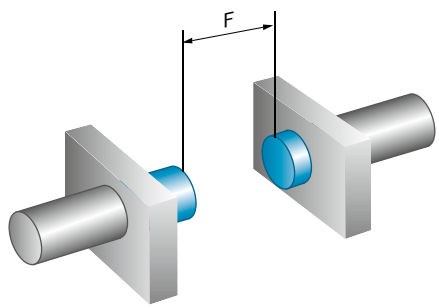

	Sensing range Sn	Installation type	A	B	C	D	E	F
IMF08-02Bxxxxxx	2 mm	Flush	-	6.5 mm	8 mm	6 mm	-	16 mm
IMF08-04Nxxxxxx	4 mm	Non-flush	8 mm	18 mm	8 mm	12 mm	8 mm	32 mm
IMF12-04Bxxxxxx	4 mm	Flush	-	12 mm	12 mm	12 mm	-	32 mm
IMF12-08Nxxxxxx	8 mm	Non-flush	12 mm	24 mm	12 mm	24 mm	16 mm	64 mm
IMF18-08Bxxxxxx	8 mm	Flush	9 mm	18 mm	18 mm	24 mm	2 mm	64 mm
IMF18-12Nxxxxxx	12 mm	Non-flush	18 mm	34 mm	18 mm	34 mm	12 mm	96 mm
IMF30-15Bxxxxxx	15 mm	Flush	-	40 mm	30 mm	45 mm	-	120 mm
IMF30-20Nxxxxxx	20 mm	Non-flush	20 mm	62 mm	30 mm	60 mm	20 mm	160 mm

8014939/2016-08-29
Subject to change without notice

Accessories

Figure	Accessory	Page
	Plug connectors and cables	➜ H-267
	Mounting systems	➜ H-258
	Further accessories	➜ H-280

C

ROBUST FULL METAL SENSORS FOR USE IN THE FOOD INDUSTRY

C

Product description

High-pressure cleaners with aggressive cleaning agents, acids, and alkalis are a challenge for sensor systems. The solution: IMI inductive proximity sensors in fully encapsulated sensor housings made from stainless steel (316L/1.4404). These sensors can withstand extreme stress, offer triple the sensing range and maximum performance.

At a glance

- Types: M8 to M30
- Triple sensing ranges: 6 mm to 40 mm
- Electrical configuration: DC 3-wire
- Enclosure rating: IP 68, IP 69K
- Temperature range: –25 °C to +85 °C
- Food-compatible stainless-steel housing, stainless steel sensing face
- Sensing face made of food-compatible stainless steel
- Resistant against cleaning agents

Your benefits

- Higher machine availability due to rugged sensor design
- Long service life even under the most extreme ambient conditions
- Quick and easy installation due to adjustment indicator
- Large operating reserves due to threefold sensing range
- High resistance to shock and vibration due to stainless steel sensing face
- Best resistance against cleaning agents
- Longer service life for reduced costs

Additional information

Detailed technical data C-109
Ordering information C-110
Dimensional drawings C-111
Connection diagram. C-111
Installation note C-112
Accessories. C-113

➜ www.sick.com/IMI

For more information, simply enter the link or scan the QR code and get direct access to technical data, CAD design models, operating instructions, software, application examples, and much more.

8014939/2016-08-29
Subject to change without notice

Detailed technical data

Features

	IM12	IM18	IM30
Housing	Cylindrical thread design		
Thread size	M12 x 1	M18 x 1	M30 x 1.5
Sensing range S_n			
Flush	6 mm	10 mm	20 mm
Non-flush	10 mm	20 mm	40 mm
Installation type	Flush / non-flush (depending on type)		
Switching frequency			
Flush	600 Hz	300 Hz	100 Hz
Non-flush	400 Hz	200 Hz	90 Hz
Output type	PNP / NPN (depending on type)		
Output function	NO / NC (depending on type)		NO
Electrical wiring	DC 3-wire		
Enclosure rating [1]	IP 68, IP 69K		
Special features	Metal Face, triple sensing range		

[1] According to EN 60529.

C

Mechanics/electronics

	IM12	IM18	IM30
Supply voltage	10 V DC ... 30 V DC		
Ripple [1]	≤ 20 %		
Voltage drop [2]	≤ 2 V		
Current consumption [3]	≤ 10 mA		
Time delay before availability	≤ 40 ms		
Hysteresis	1 % ... 15 %		
Repeatability [4] [5]	≤ 5 %		
Temperature drift (of S_r)	≤ 10 %		
EMC	According to EN 60947-5-2		
Continuous current I_a	≤ 200 mA		
Connection type	Male connector, M12		
Short-circuit protection	✔		
Reverse polarity protection	✔		
Power-up pulse protection	✔		
Shock and vibration resistance	30 g, 11 ms / 10 ... 55 Hz, 1 mm		
Ambient operating temperature	–25 °C ... +85 °C		
Housing material	Stainless steel, V4A (1.4435, 316L)		
Sensing face material	Stainless steel, V4A (1.4435, 316L)		
Tightening torque, max.	≤ 20 Nm	≤ 50 Nm	150 Nm

[1] Of V_S.
[2] At I_a max.
[3] Without load.
[4] Of Sr.
[5] UB = 20 V DC ... 30 V DC, TA = 23 °C ± 5 °C.

Reduction factors

	IM12	IM18	IM30
Note	The values are reference values which may vary		
St37 steel (Fe)	Approx. 1		
Stainless steel (V4A, 316L)			
Flush	Approx. 0.5	Approx. 0.4	Approx. 0.5
Non-flush	Approx. 0.5	Approx. 0.4	–
Aluminum (Al)	Approx. 1		
Copper (Cu)			
Flush	Approx. 0.8		Approx. 0.9
Non-flush	Approx. 0.8	Approx. 0.85	Approx. 0.9
Brass (Br)	Approx. 1.3		Approx. 1.2

C

Ordering information

Other models ➜ www.sick.com/IMI

IM12

- **Connection:** Male connector M12, 4-pin

Sensing range S_n	Installation type	Output function	Output type	Connection diagram	Type	Part no.
6 mm	Flush	NC	PNP	Cd-008	IM12-06BPO-NC1	6027574
		NO	NPN	Cd-007	IM12-06BNS-NC1	6027573
			PNP	Cd-007	IM12-06BPS-NC1	6027572
10 mm	Non-flush	NO	NPN	Cd-007	IM12-10NNS-NC1	6027576
			PNP	Cd-007	IM12-10NPS-NC1	6027575

IM18

- **Connection:** Male connector M12, 4-pin

Sensing range S_n	Installation type	Output function	Output type	Connection diagram	Type	Part no.
10 mm	Flush	NC	PNP	Cd-008	IM18-10BPO-NC1	6027579
		NO	NPN	Cd-007	IM18-10BNS-NC1	6027578
			PNP	Cd-007	IM18-10BPS-NC1	6027577
20 mm	Non-flush	NO	NPN	Cd-007	IM18-20NNS-NC1	6027581
			PNP	Cd-007	IM18-20NPS-NC1	6027580

IM30

- **Connection:** Male connector M12, 4-pin

Sensing range S_n	Installation type	Output function	Output type	Connection diagram	Type	Part no.
20 mm	Flush	NO	NPN	Cd-007	IM30-20BNS-NC1	6027583
			PNP	Cd-007	IM30-20BPS-NC1	6027582
40 mm	Non-flush	NO	NPN	Cd-007	IM30-40NNS-NC1	6027585
			PNP	Cd-007	IM30-40NPS-NC1	6027584

Dimensional drawings (Dimensions in mm (inch))

IMI12, flush

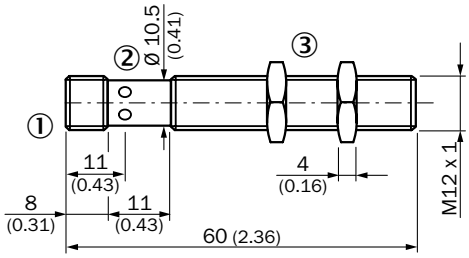

① Connection
② Indication LED
③ Fastening nuts (2 x); width across 17, stainless steel V4A

IMI12, non flush

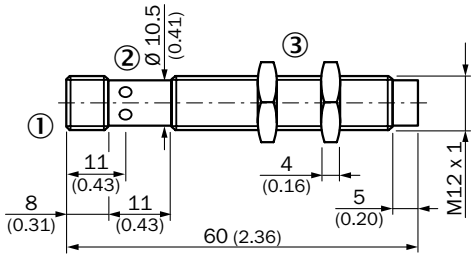

① Connection
② Indication LED
③ Fastening nuts (2 x); width across 17, stainless steel V4A

IMI18, flush

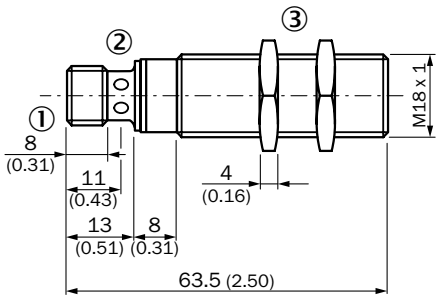

① Connection
② Indication LED
③ Fastening nuts (2x); width across 24, metal

IMI18, non flush

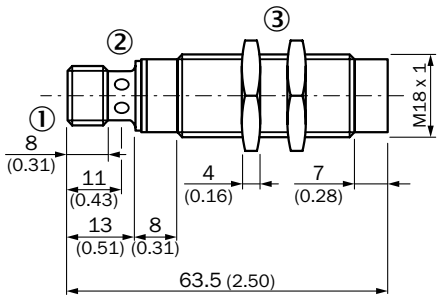

① Connection
② Indication LED
③ Fastening nuts (2x); width across 24, metal

IMI30, flush

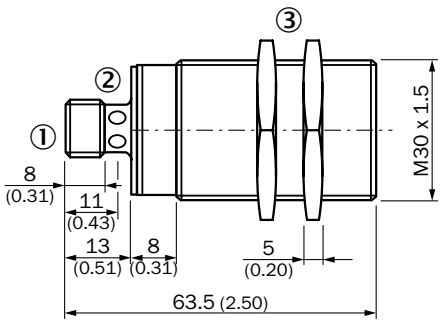

① Connection
② Indication LED
③ Fastening nuts (2x); width across 24, metal

IMI30, non flush

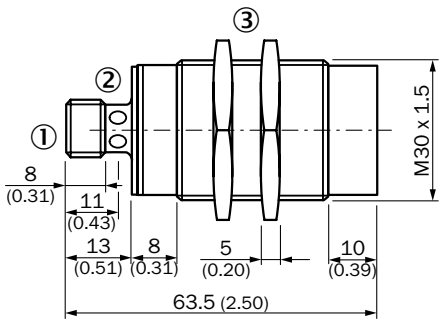

① Connection
② Indication LED
③ Fastening nuts (2x); width across 24, metal

Connection diagram

Cd-007

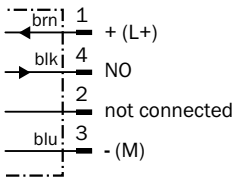

Cd-008

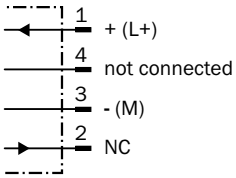

Installation note

Flush installation

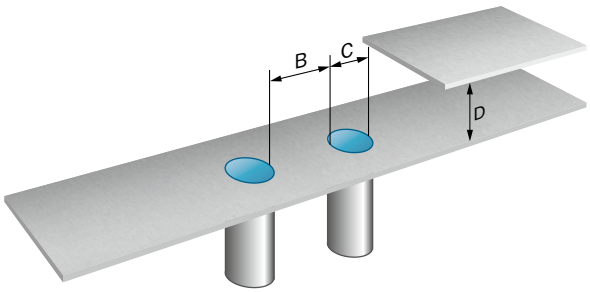

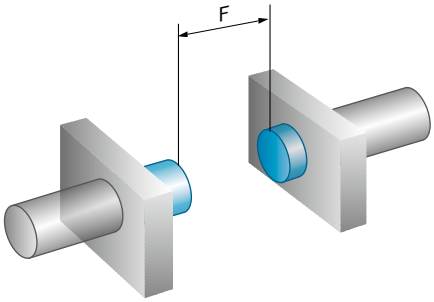

Non-flush installation

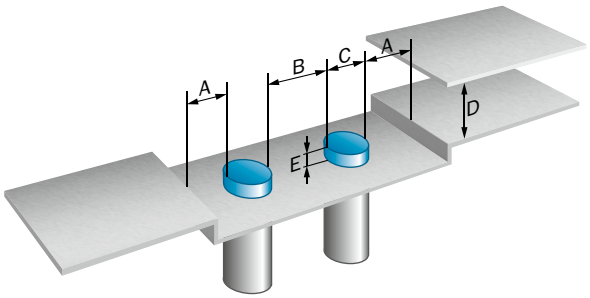

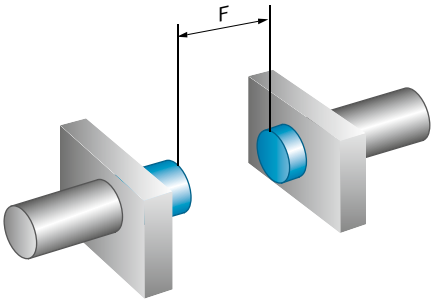

	Sensing range Sn	Installation type	A	B	C	D	E	F
IM12-xxBxx-xxx	6 mm	Flush	6 mm	38 mm	12 mm	18 mm	0 mm	60 mm
IM12-xxNxx-xxx	10 mm	Non-flush	24 mm	108 mm	18 mm	30 mm	Aluminum: 13 mm Steel: 22 mm Brass: 15 mm Stainless steel: 21 mm	100 mm
IM18-xxBxx-xxx	10 mm	Flush	16 mm	42 mm	18 mm	30 mm	0 mm	100 mm
IM18-xxNxx-xxx	20 mm	Non-flush	41 mm	182 mm	18 mm	60 mm	Aluminum: 20 mm Steel: 34 mm Brass: 22 mm Stainless steel: 36 mm	200 mm
IM30-xxBxx-xxx	20 mm	Flush	30 mm	80 mm	30 mm	60 mm	0 mm	200 mm
IM30-xxNxx-xxx	40 mm	Non-flush	75 mm	270 mm	30 mm	120 mm	Aluminum: 34 mm Steel: 18 mm Brass: 34 mm Stainless steel: 18 mm	400 mm

Accessories

Figure	Accessory	Page
	Plug connectors and cables	➜ H-267
	Mounting systems	➜ H-258
	Further accessories	➜ H-280

C

NAMUR SENSORS FOR EXPLOSIVE ZONES

C

Product description

Safe detection in ATEX areas. The IMN sensors are available for this due to their high quality and reliability. No whether in category 1G or 2G, the NAMUR sensors from SICK are perfectly suited for explosion-hazardous areas.

At a glance

- Types: M8 to M30
- Sensing ranges: 1 mm to 15 mm
- NAMUR according to DIN EN 60947-5-6
- Enclosure rating: IP 67
- Temperature range: –20 °C to +70 °C
- Nickel-plated brass housing; plastic sensing face
- ATEX device category 1G and 2G
- Suitable for applications in explosion-hazardous areas

Your benefits

- Exceptional protection in explosive areas
- Category 1G and 2G for zones 0 and 1
- Output according to DIN EN 60947-5-6

Additional information

Detailed technical data C-115
Ordering information C-116
Dimensional drawings C-117
Connection diagram. C-118
Installation note C-118
Accessories. C-119

➜ www.sick.com/IMN

For more information, simply enter the link or scan the QR code and get direct access to technical data, CAD design models, operating instructions, software, application examples, and much more.

8014939/2016-08-29
Subject to change without notice

Detailed technical data

Features

	IM08 NAMUR	IM12 NAMUR	IM18 NAMUR	IM30 NAMUR
Housing	Cylindrical thread design			
Thread size	M8 x 1	M12 x 1	M18 x 1	M30 x 1.5
Sensing range S_n				
Flush	1 mm	2 mm	5 mm	10 mm
Non-flush	–	4 mm	8 mm	15 mm
Installation type	Flush	Flush / non-flush (depending on type)		
Switching frequency				
Flush	2,000 Hz	1,200 Hz	720 Hz	450 Hz
Non-flush	–	1,500 Hz	300 Hz	200 Hz
Output type	NAMUR			
Output function	NC			
Enclosure rating [1]	IP 67			
Ex area category	1G		1G, 2G	

[1] According to EN 60529.

C

Mechanics/electronics

	IM08 NAMUR	IM12 NAMUR	IM18 NAMUR	IM30 NAMUR
Supply voltage [1]	7.5 V DC ... 25 V DC			
Current consumption [1]	≤ 30 mA			
Hysteresis	1 % ... 15 %			
Temperature drift (of S_r)	± 10 %			
EMC	According to EN 60947-5-6			
Current consumption, sensor is activated	≤ 1 mA			
Current consumption, sensor is not activated	≥ 2.2 mA			
Connection type	Cable, 2 m, PVC			
Shock and vibration resistance	30 g, 11 ms / 10 ... 55 Hz, 1 mm			
Ambient operating temperature	–20 °C ... +70 °C			
Housing material	Nickel-plated brass			
Sensing face material	Plastic, PBT			
Tightening torque, max.	≤ 2.5 Nm	7 Nm	35 Nm	50 Nm
EC Approval Certificate	PTB 03 ATEX 2037			
Input voltage U_i max. [2]	15 V			
Input power P_i max. [2]	120 mW			
Input current I_i max. [2]	50 mA			
Internal capacitance C_i max.	80 nF [2]	140 nF [2]	145 nF [2] / 155 nF [2] (depending on type)	145 nF [2]
Internal inductance L_i max.	70 µH [2]	340 µH [2] / 130 µH [2] (depending on type)	45 µH [2] / 50 µH [2] (depending on type)	140 µH [2] / 110 µH [2] (depending on type)
Nominal voltage [3]	8.2 V DC			
Device labeling	II 1G Ex ia IIC T6 Ga Ta –20 °C ... +70 °C		II 1G Ex ia IIC T6 Ga Ta –20 °C ... +70 °C, II 2 G Ex ia IIC T6 Gb Ta: –20 °C ... +70 °C	

[1] When used outside the hazardous area.
[2] For connection to a separately certified intrinsically safe circuit only.
[3] 1 kΩ.

Reduction factors

Note	The values are reference values which may vary
Stainless steel (V2A, 304)	Approx. 0.7
Aluminum (Al)	Approx. 0.4
Copper (Cu)	Approx. 0.3
Brass (Br)	Approx. 0.5

Ordering information

Other models ➜ www.sick.com/IMN

C

IM08 NAMUR

- **Output function:** NC
- **Connection:** Cable, 2-wire, 2 m, PVC

Sensing range S_n	Installation type	Internal capacitance C_i max. [1]	Internal inductance L_i max. [1]	Connection diagram	Type	Part no.
1 mm	Flush	80 nF	70 µH	Cd-012	IM08-01B-N-ZW0	6021123

[1] For connection to a separately certified intrinsically safe circuit only.

IM12 NAMUR

- **Output function:** NC
- **Connection:** Cable, 2-wire, 2 m, PVC

Sensing range S_n	Installation type	Internal capacitance C_i max. [1]	Internal inductance L_i max. [1]	Connection diagram	Type	Part no.
2 mm	Flush	140 nF	340 µH	Cd-012	IM12-02B-N-ZW0	6021124
4 mm	Non-flush	140 nF	130 µH	Cd-012	IM12-04N-N-ZW0	6021125

[1] For connection to a separately certified intrinsically safe circuit only.

IM18 NAMUR

- **Output function:** NC
- **Connection:** Cable, 2-wire, 2 m, PVC

Sensing range S_n	Installation type	Internal capacitance C_i max. [1]	Internal inductance L_i max. [1]	Connection diagram	Type	Part no.
5 mm	Flush	145 nF	45 µH	Cd-012	IM18-05B-N-ZW0	6021126
8 mm	Non-flush	155 nF	50 µH	Cd-012	IM18-08N-N-ZW0	6021127

[1] For connection to a separately certified intrinsically safe circuit only.

IM30 NAMUR

- **Output function:** NC
- **Connection:** Cable, 2-wire, 2 m, PVC

Sensing range S_n	Installation type	Internal capacitance C_i max. [1]	Internal inductance L_i max. [1]	Connection diagram	Type	Part no.
10 mm	Flush	145 nF	140 µH	Cd-012	IM30-10B-N-ZW0	6021128
15 mm	Non-flush	145 nF	110 µH	Cd-012	IM30-15N-N-ZW0	6021129

[1] For connection to a separately certified intrinsically safe circuit only.

Dimensional drawings (Dimensions in mm (inch))

IMN08 Namur, flush

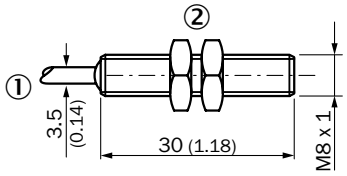

① Connection
② Fastening nuts (2x); width across 13, metal

IM12 Namur, non flush

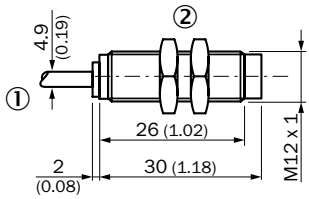

① Connection
② Fastening nuts (2x); width across 17, metal

IM18 Namur, non flush

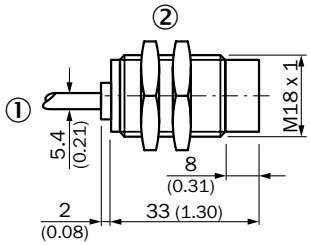

① Connection
② Fastening nuts (2x); width across 17, metal

IM30 Namur, non flush

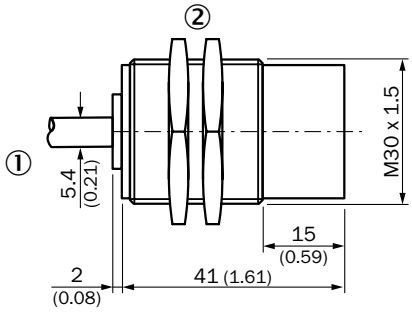

① Connection
② Fastening nuts (2x); width across 36, metal

IM12 Namur, flush

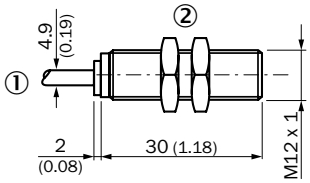

① Connection
② Fastening nuts (2x); width across 17, metal

IM18 Namur, flush

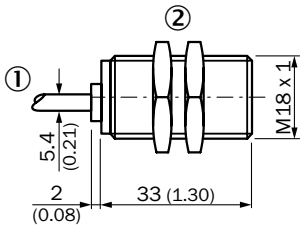

① Connection
② Fastening nuts (2x); width across 24, metal

IM30 Namur, flush

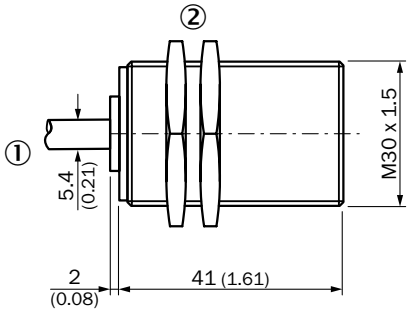

① Connection
② Fastening nuts (2x); width across 36, metal

C

Connection diagram

Cd-012

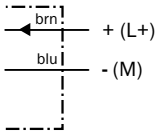

C

Installation note

Flush installation

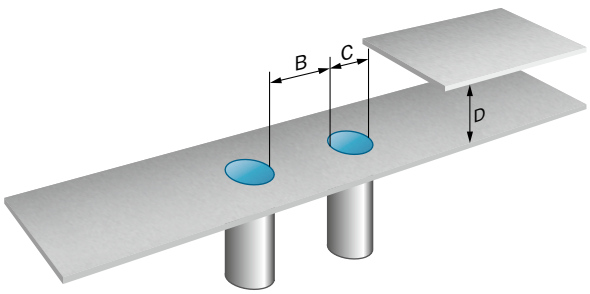

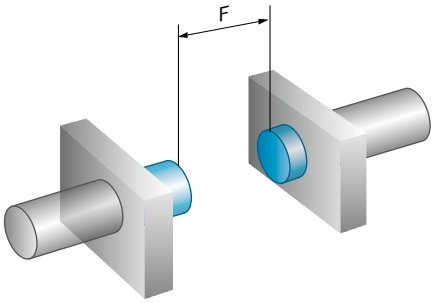

Non-flush installation

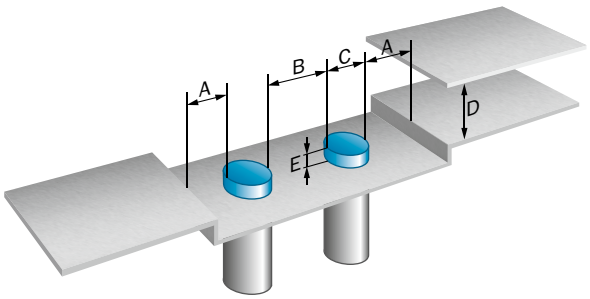

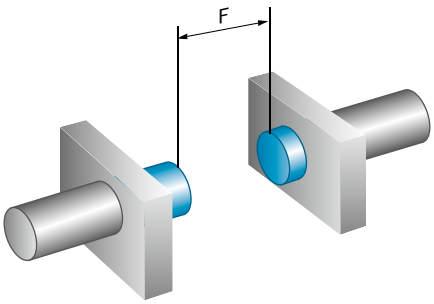

	Sensing range Sn	Installation type	A	B	C	D	E	F
IM08-01B-x-xxx	1 mm	Flush	-	8 mm	8 mm	3 mm	-	8 mm
IM12-02B-x-xxx	2 mm	Flush	-	12 mm	12 mm	6 mm	-	16 mm
IM12-04N-x-xxx	4 mm	Non-flush	12 mm	24 mm	12 mm	12 mm	8 mm	32 mm
IM18-05B-x-xxx	5 mm	Flush	-	18 mm	18 mm	15 mm	-	40 mm
IM18-08N-x-xxx	8 mm	Non-flush	18 mm	36 mm	18 mm	24 mm	16 mm	64 mm
IM30-10B-x-xxx	10 mm	Flush	-	30 mm	30 mm	30 mm	-	80 mm
IM30-15N-x-xxx	15 mm	Non-flush	30 mm	60 mm	30 mm	45 mm	30 mm	120 mm

8014939/2016-08-29

Subject to change without notice

Accessories

Connection systems

Modules and gateways

Power supply modules

Figure	Brief description	Type	Part no.
	NAMUR isolatig amplifier, Cable fault detection, Switching outputs: 2 NO relay (1 per channel), Supply voltage: 24 V ... 230 V, Voltage type: AC/DC	EN2-2EX1	6041096
	NAMUR isolatig amplifier, Cable fault detection, Switching outputs: 2 NO relay (1 per channel), Supply voltage: 19,2 V ... 30 V, Voltage type: DC	EN2-2EX3	6041095

Figure	Accessory	Page
	Plug connectors and cables	➜ H-267
	Mounting systems	➜ H-258
	Further accessories	➜ H-280

C

ANALOG SENSORS WITH TRIPLE SENSING RANGE FOR USE IN INDUSTRIAL ENVIRONMENTS

C

Product description

The IMA inductive analog sensors give out a current or voltage signal which is in proportional relation to the distance from the sensor to the metal target. They are therefore optimally suited for monitoring travel paths, positions or even differentiating between spaces and material variants. These sensors are characterized by extremely large detection ranges up to 40 mm, high accuracy, precision and no blind areas.

At a glance

- Types: M8 to M30
- Extended detection ranges: 0 mm to 40 mm
- Analog output signal 0 V ... 10 V and 4 mA ... 20 mA
- Enclosure rating: IP 67
- Temperature range: –25 °C to +75 °C
- Nickel-plated brass housing; plastic sensing face
- High resolution and repeatability
- Distance control and continuous position detection

Your benefits

- High positioning accuracy
- No mechanical add-on parts required for monitoring of great distances
- Less space required for the same sensing range when compared with standard sensors
- Less storage due to reduced multiplicity of types on account of integrated current and voltage interface
- Large detection areas

Additional information

Detailed technical data C-121
Ordering information C-123
Dimensional drawings C-124
Connection diagram. C-125
Response diagram C-125
Temperature derating C-126
Installation note C-127
Accessories. C-127

➜ www.sick.com/IMA

For more information, simply enter the link or scan the QR code and get direct access to technical data, CAD design models, operating instructions, software, application examples, and much more.

8014939/2016-08-29
Subject to change without notice

Detailed technical data

Features

	IMA08	IMA12	IMA18	IMA30
Housing	Cylindrical thread design			
Thread size	M8 x 1	M12 x 1	M18 x 1	M30 x 1.5
Sensing range S_n				
Quasi-flush	4 mm	6 mm	10 mm	20 mm
Non-flush	–		20 mm	40 mm
Installation type	Quasi-flush		Quasi-flush / non-flush	(depending on type)
Output current	–	4 mA ... 20 mA		
Output voltage	0 V ... 10 V			
Output function	Analog			
Enclosure rating [1]	IP 67			

[1] According to EN 60529: 2000-09.

C

Mechanics/electronics

	IMA08	IMA12	IMA18	IMA30
Supply voltage	15 V DC ... 30 V DC			
Ripple [1]	≤ 20 %			
Time delay before availability	≤ 50 ms		≤ 50 ms / ≤ 60 ms (depending on type)	≤ 50 ms
Temperature drift (of S_r)	± 5 % [2] ± 10 % [3]		≤ 10 %	
Current consumption, no load [4]	≤ 10 mA	≤ 12 mA		
Load current [5]	± 10 mA			
Max. load resistance	–		400 Ω [6] 1,000 Ω [7]	
Repeatability (T_a not constant) [8] [9] [10]				
Quasi-flush	0.3 mm			
Non-flush	–		0.3 mm	0.6 mm
Repeatability (T_a constant)				
Quasi-flush	± 0.01 mm		± 0.02 mm	± 0.05 mm
Non-flush	–		± 0.05 mm	± 0.1 mm
Resolution	≤ 1 µm		≤ 2 µm / ≤ 5 µm (depending on type)	≤ 5 µm / ≤ 10 µm (depending on type)
Output voltage Q_{A1}	S = 0 mm: 0 V/-0 +0,4 V (23 °C), s = 2 mm: +5,2 V/ +-0,4 V (23 °C), s = 4 mm: +10 V/ +-0,4 V (23 °C)	S = 0 mm: 0 V/-0 +0,4 V (23 °C), s = 3 mm: +5,2 V/ +-0,4 V (23 °C), s = 6 mm: +10 V/ +-0,4 V (23 °C)	S = 0 mm: 0 V/-0 +0,4 V (23 °C) / s = 5 mm: +5,2 V/ +-0,4 V (23 °C) / s = 10 mm: +10 V/ +-0,4 V (23 °C) / s = 0 mm: 0 V/-0 +0,4 V (23 °C) / s = 10 mm: +5,2 V/ +-0,4 V (23 °C) / s = 20 mm: +10 V/ +-0,4 V (23 °C) (depending on type)	S = 0 mm: 0 V/-0 +0,4 V (23 °C) / s = 10 mm: +5,2 V/ +-0,4 V (23 °C) / s = 20 mm: +10 V/ +-0,4 V (23 °C) / s = 0 mm: 0 V/-0 +0,4 V (23 °C) / s = 20 mm: +5,2 V/ +-0,4 V (23 °C) / s = 40 mm: +10 V/ +-0,4 V (23 °C) (depending on type)

C

	IMA08	IMA12	IMA18	IMA30
Output current Q_{A2}	–	S = 0 mm: 4 mA/ +-0,8 mA (23 °C), s = 6 mm: 20 mA/ +-0,8 mA (23 °C)	S = 0 mm: 4 mA/ +-0,8 mA (23 °C) / s = 10 mm: 20 mA/ +-0,8 mA (23 °C) / s = 0 mm: 4 mA/ +-0,8 mA (23 °C) / s = 20 mm: 20 mA/ +-0,8 mA (23 °C) (depending on type)	S = 0 mm: 4 mA/ +-0,8 mA (23 °C) / s = 20 mm: 20 mA/ +-0,8 mA (23 °C) / s = 0 mm: 4 mA/ +-0,8 mA (23 °C) / s = 40 mm: 20 mA/ +-0,8 mA (23 °C) (depending on type)
Bandwidth				
Quasi-flush	1,600 Hz [11]	1,000 Hz [12]	500 Hz [13]	200 Hz [14]
Non-flush	–		250 Hz [14]	100 Hz [15]
Connection type	Male connector, M12			
Short-circuit protection	✔			
Reverse polarity protection	✔			
Ambient operating temperature	–25 °C ... +70 °C		–25 °C ... +70 °C [16] [17]	
Housing material	Nickel-plated brass			
Sensing face material	Plastic, PBT			

[1] Of V_S.
[2] At 0 °C ... +70 °C.
[3] At –25 °C ... 0 °C.
[4] Without load.
[5] At voltage output QA1.
[6] Ub = 15 V.
[7] Ub = 30 V.
[8] As per IEC 60947-5-2.
[9] Ub = DC 20 V ... 30 V.
[10] TA = 23 °C ± 5 °C.
[11] –3 dB if s = 2 mm.
[12] –3 dB if s = 3 mm.
[13] –3 dB if s = 5 mm.
[14] –3 dB if s = 10 mm.
[15] –3 dB if s = 20 mm.
[16] QA1 loaded, QA2 unloaded.
[17] QA1 loaded, QA2 loaded: see temperature reduction.

Reduction factors

	IMA08	IMA12	IMA18	IMA30
Note	The values are reference values which may vary			
Stainless steel (V2A, 304)				
Quasi-flush	Approx. 0.68	Approx. 0.47	Approx. 0.6	Approx. 0.65
Non-flush	–		Approx. 0.69	Approx. 0.8
Aluminum (Al)				
Quasi-flush	Approx. 0.28		Approx. 0.18	Approx. 0.2
Non-flush	–		Approx. 0.38	Approx. 0.4
Copper (Cu)				
Quasi-flush	Approx. 0.25	Approx. 0.2	Approx. 0.15	Approx. 0.17
Non-flush	–		Approx. 0.36	Approx. 0.4
Brass (Br)				
Quasi-flush	Approx. 0.4	Approx. 0.35	Approx. 0.28	Approx. 0.3
Non-flush	–		Approx. 0.46	Approx. 0.5

8014939/2016-08-29
Subject to change without notice

Ordering information

Other models ➜ www.sick.com/IMA

IMA08

- **Connection:** male connector M12, 4-pin

Detection range	Installation type	Repeat accuracy, typ. [1] [2] [3]	Repeatability (T_a constant)	Connection diagram	Type	Part no.
0 mm ... 4 mm	Quasi-flush	0.3 mm	± 0.01 mm	Cd-021	IMA08-04BE3ZC0K	6041782

[1] As per IEC 60947-5-2.
[2] Ub = DC 20 V ... 30 V.
[3] TA = 23 °C ± 5 °C.

IMA12

- **Connection:** male connector M12, 4-pin

Detection range	Installation type	Repeat accuracy, typ. [1] [2] [3]	Repeatability (T_a constant)	Connection diagram	Type	Part no.
0 mm ... 6 mm	Quasi-flush	0.3 mm	± 0.01 mm	Cd-021	IMA12-06BE3ZC0K	6041792
				Cd-022	IMA12-06BE1ZC0S	6056420

[1] As per IEC 60947-5-2.
[2] Ub = DC 20 V ... 30 V.
[3] TA = 23 °C ± 5 °C.

IMA18

- **Connection:** male connector M12, 4-pin

Detection range	Installation type	Repeat accuracy, typ. [1] [2] [3]	Repeatability (T_a constant)	Connection diagram	Type	Part no.
0 mm ... 10 mm	Quasi-flush	0.3 mm	± 0.02 mm	Cd-022	IMA18-10BE1ZC0K	6041793
0 mm ... 20 mm	Non-flush	0.3 mm	± 0.05 mm	Cd-022	IMA18-20NE1ZC0K	6041794

[1] As per IEC 60947-5-2.
[2] Ub = DC 20 V ... 30 V.
[3] TA = 23 °C ± 5 °C.

IMA30

- **Connection:** male connector M12, 4-pin

Detection range	Installation type	Repeat accuracy, typ. [1] [2] [3]	Repeatability (T_a constant)	Connection diagram	Type	Part no.
0 mm ... 20 mm	Quasi-flush	0.3 mm	± 0.05 mm	Cd-022	IMA30-20BE1ZC0K	6041795
0 mm ... 40 mm	Non-flush	0.6 mm	± 0.1 mm	Cd-022	IMA30-40NE1ZC0K	6041796

[1] As per IEC 60947-5-2.
[2] Ub = DC 20 V ... 30 V.
[3] TA = 23 °C ± 5 °C.

Dimensional drawings (Dimensions in mm (inch))

IMA08, connector, quasi-flush

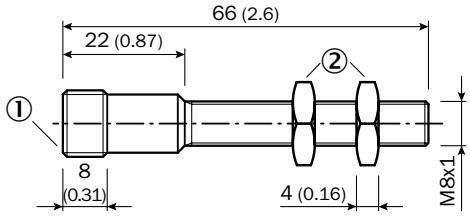

① Connection
② Fastening nuts (2x); width across 13, metal

IMA12, connector, quasi-flush, short-body

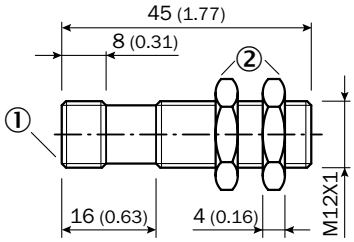

① Connection
② Fastening nuts (2x); width across 17, metal

C

IMA12, connector, quasi-flush, standard

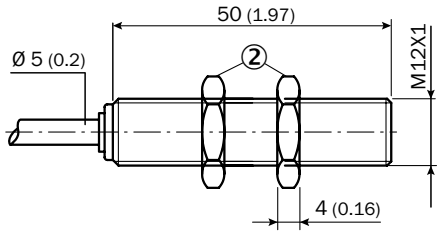

① Connection
② Fastening nuts (2x); width across 17, metal

IMA18, connector, quasi-flush

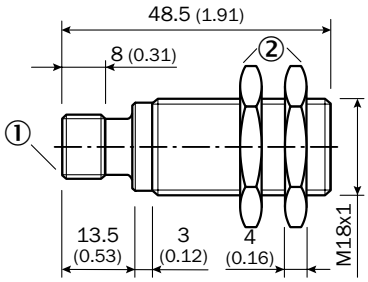

① Connection
② Fastening nuts (2x); width across 24, metal

IMA18, connector, non-flush

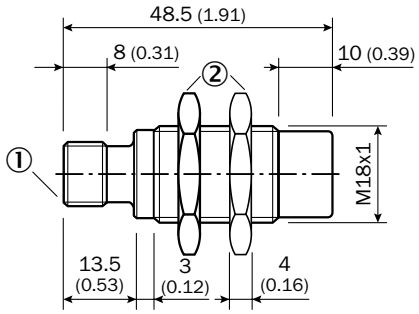

① Connection
② Fastening nuts (2x); width across 24, metal

IMA30, connector, quasi-flush

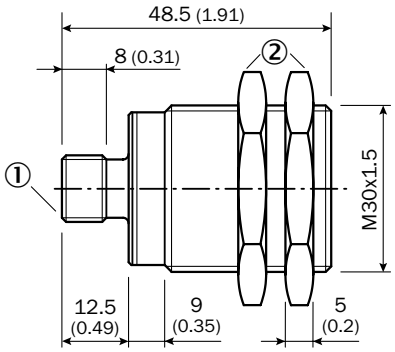

① Connection
② Fastening nuts (2x); width across 36, metal

IMA30, connector, non-flush

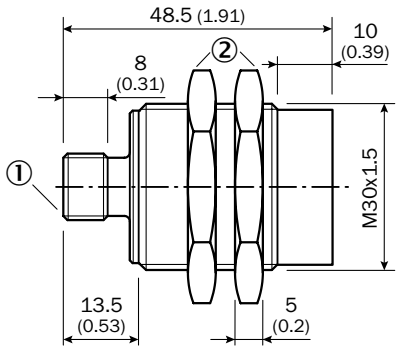

① Connection
② Fastening nuts (2x); width across 36, metal

Connection diagram

Cd-021

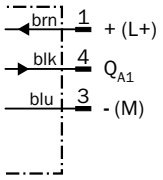

Cd-022

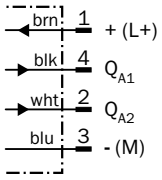

Response diagram

IMA08

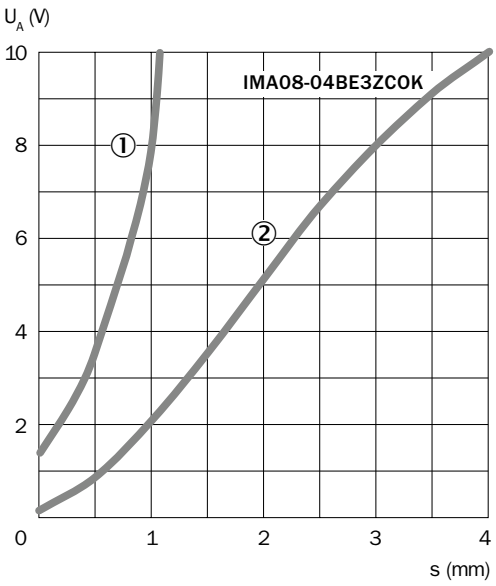

① Aluminium (AL)
② St37 (FE)

IMA12

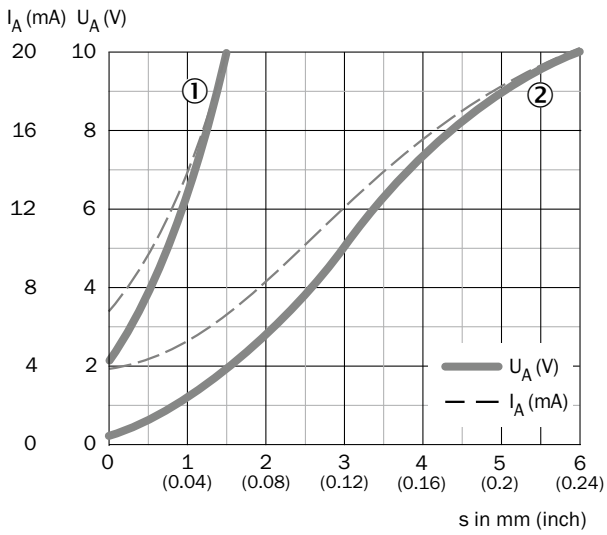

① Aluminium (AL)
② St37 (FE)

IMA18, quasi-flush

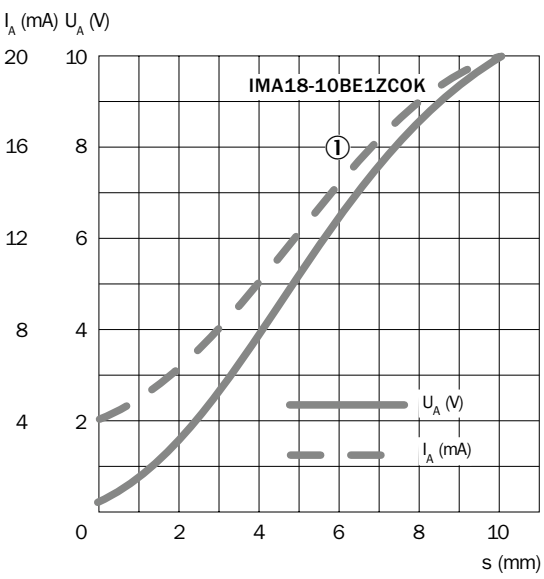

① St37 (FE)

IMA18, non-flush

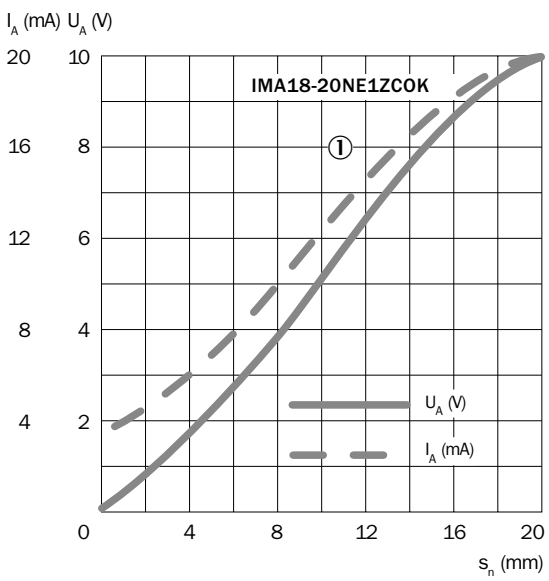

① St37 (FE)

C

IMA30, quasi-flush

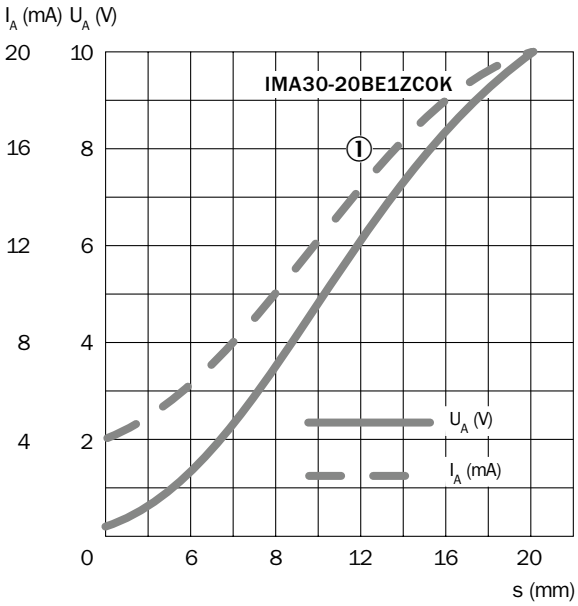

① St37 (FE)

IMA30, non-flush

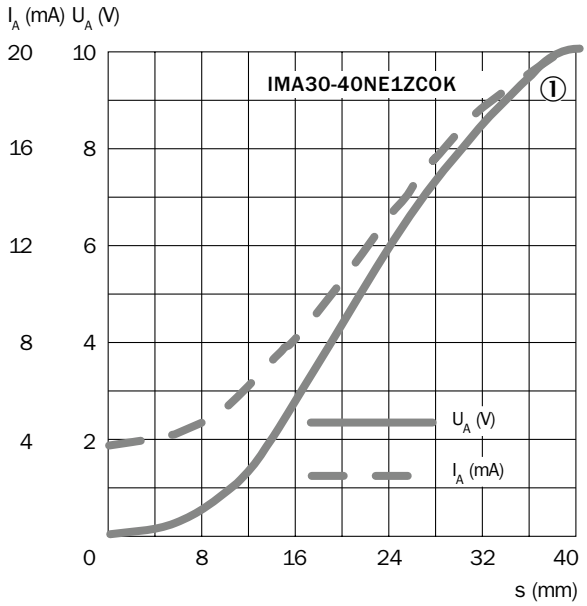

① St37 (FE)

Temperature derating

IMA18 / IMA30

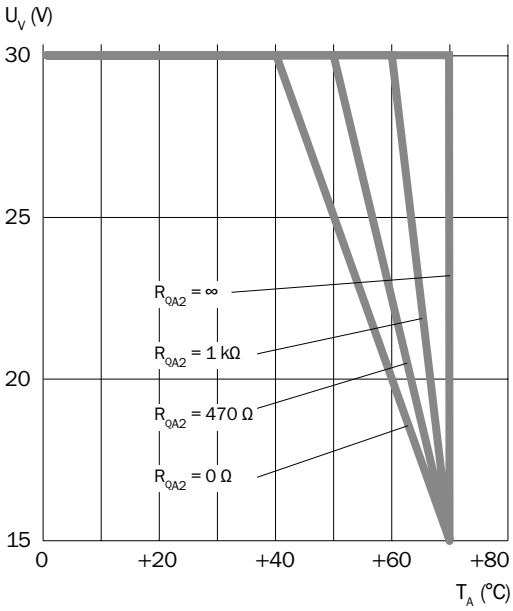

Installation note

Quasi-flush / non-flush installation

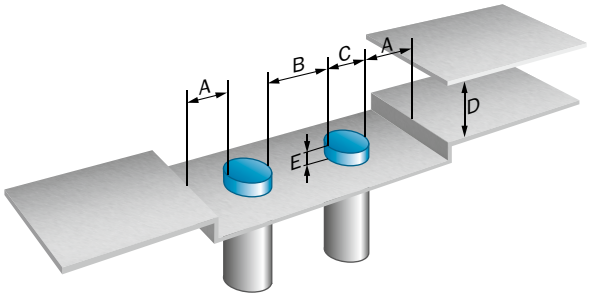

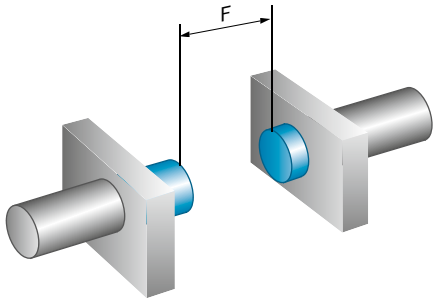

	Sensing range Sn	Installation type	A	B	C	D	E	F
IMA08-04Bxxxxxx	4 mm	Flush	4 mm	12 mm	8 mm	12 mm	1 mm	40 mm
IMA12-06Bxxxxxx	6 mm	Flush	6 mm	18 mm	12 mm	18 mm	2 mm	60 mm
IMA18-10Bxxxxxx	10 mm	Flush	10 mm	26 mm	18 mm	30 mm	4 mm	100 mm
IMA18-20Nxxxxxx	20 mm	Non-flush	21 mm	60 mm	18 mm	60 mm	20 mm	200 mm
IMA30-20Bxxxxxx	20 mm	Flush	25 mm	50 mm	30 mm	60 mm	6 mm	200 mm
IMA30-40Nxxxxxx	40 mm	Non-flush	40 mm	120 mm	30 mm	120 mm	Aluminum: 25 mm Steel: 35 mm Brass: 25 mm Stainless steel: 20 mm	400 mm

C

Accessories

Figure	Accessory	Page
	Plug connectors and cables	➜ H-267
	Mounting systems	➜ H-258
	Further accessories	➜ H-280

HIGH-PRESSURE-RESISTANT SENSORS FOR HYDRAULIC APPLICATIONS

C

Product description

The inductive, high-pressure-resistant IMP sensors are perfectly suited for the query of end positions in hydraulic cylinders. The use of state-of-the-art ASIC and manufacturing technologies from SICK sets new standards in installation size, service life and load capability for the sensors. Due to the stable stainless steel housing and an active high-performance ceramic surface, they are pressure-resistant up to 500 bar. Above-average system throughput is a matter of course for the range of models M5, M8, M12 and M14 thanks to 1 million tested pressure cycles.

At a glance

- Types: M5, M8, M12 and M14
- Extended sensing ranges: 1 mm to 3 mm
- Electrical configuration: DC 3-/4-wire
- Enclosure rating: IP 68
- Temperature range: –25 °C to +100 °C
- Stainless steel housing with active surface made from stable high-performance ceramic
- Pressure resistant up to 500 bar, gas-tight front
- Expected service life of up to 1 million pressure cycles

Your benefits

- Reduced maintenance costs
- Extremely resilient and durable
- Up to 50 times longer service life compared to conventional sensors under pressure cycles
- Simple compensation of cylinder tolerances
- Simple integration due to small design
- Controlled piston deceleration
- Increased piston service life due to collision prevention at the end of the work cycle

Additional information

Detailed technical data C-129
Ordering information C-130
Dimensional drawings C-132
Connection diagram. C-133
Installation note C-134
Assembly note C-134
Accessories. C-135

➜ www.sick.com/IMP

For more information, simply enter the link or scan the QR code and get direct access to technical data, CAD design models, operating instructions, software, application examples, and much more.

8014939/2016-08-29
Subject to change without notice

Detailed technical data

Features

	IMP05	IMP08	IMP12	IMP14
Housing	Cylindrical thread design			
Thread size	M5 x 0.5	M8 x 1	M12 x 1	M14 x 1.5
Pressure resistance	≤ 500 bar			
Sensing range S_n	1 mm	1.5 mm		3 mm
Installation type	Flush			
Switching frequency	1,000 Hz	800 Hz	600 Hz	500 Hz
Output type	PNP / NPN (depending on type)			
Output function	NO		NO / NC / Complementary (depending on type)	NO / NC (depending on type)
Electrical wiring	DC 3-wire		DC 3-wire / DC 4-wire (depending on type)	DC 3-wire
Enclosure rating [1]	IP 68			
Special features	High pressure resistant			

[1] Sensing face.

C

Mechanics/electronics

	IMP05	IMP08	IMP12	IMP14
Supply voltage	10 V DC ... 30 V DC			
Ripple [1]	≤ 20 %			
Voltage drop	≤ 2 V			
Current consumption [3]	≤ 10 mA			
Time delay before availability	≤ 30 ms		≤ 50 ms	
Hysteresis [4]	1 % ... 15 %			
Repeatability [5] [6]	≤ 5 %		≤ 7 %	≤ 4 %
Temperature drift (of S_r)				
DC 3-wire	± 10 % [7] / ± 15 % [8]		≤ 15 %	15 %
DC 4-wire	–		± 10 % [7] / ± 15 % [8]	–
EMC	According to EN 60947-5-2			According to EN 60947-5-2 [9]
Continuous current I_a	≤ 200 mA			
Vacuum resistance [10]	10^{-8} Torr			
Large sealing ring	–		5.3 mm x 2.4 mm	11.5 mm x 2.0 mm
Size support ring	7.5 mm x 4.4 mm x 1 mm	9.9 mm x 6.6 mm x 1 mm	10 mm x 5.9 mm x 1 mm	–
Connection type	Cable, 2 m, PUR		Male connector, M12	
Short-circuit protection	✔			
Reverse polarity protection	✔			
Shock and vibration resistance	30 g, 11 ms / 10 ... 55 Hz, 1 mm			
Ambient operating temperature				
DC 3-wire	–25 °C ... +100 °C		–25 °C ... +80 °C	
DC 4-wire	–		–25 °C ... +100 °C	–
Housing material	Phynox	Stainless steel, V2A		Stainless steel, V4A
Sensing face material	Ceramics			
Sealing ring material	–		FPM	NBR

	IMP05	IMP08	IMP12	IMP14
Material, supporting ring	FPM		–	
Tightening torque, max.	≤ 5 Nm	≤ 12 Nm	≤ 40 Nm	≤ 70 Nm

[1] Of V_S.
[2] With Ia = 200 mA.
[3] Without load.
[4] Typ. 8%.
[5] Ub = 20 ... 30 VDC.
[6] Ta = 23 °C ± 5 °C.
[7] -25 °C...+70 °C.
[8] +70 °C...+100 °C.
[9] IEC61000-4-4: 1kV.
[10] Front.

C

Reduction factors

	IMP05	IMP08	IMP12	IMP14
Note	The values are reference values which may vary			
St37 steel (Fe)	1			
Stainless steel (V2A, 304)	0	Approx. 0.66	Approx. 0.75	Approx. 0.85
Aluminum (Al)	0	Approx. 0.26	Approx. 0.2	Approx. 0
Copper (Cu)	0	Approx. 0.22	Approx. 0.12	Approx. 0
Brass (Br)	0	Approx. 0.39	Approx. 0.34	Approx. 0.15

Ordering information

Other models ➜ www.sick.com/IMP

IMP05

- **Connection:** Cable, 3-wire, 2 m, PUR

Housing length	Sensing range S_n	Output function	Output type	Connection diagram	Type	Part no.
27 mm	1 mm	NO	NPN	Cd-001	IMP05-01BNSVU2S	6050110
			PNP	Cd-001	IMP05-01BPSVU2S	6050109

IMP08

- **Connection:** Cable, 3-wire, 2 m, PUR

Housing length	Sensing range S_n	Output function	Output type	Connection diagram	Type	Part no.
30 mm	1.5 mm	NO	NPN	Cd-001	IMP08-1B5NSVU2S	6050112
			PNP	Cd-001	IMP08-1B5PSVU2S	6050111

8014939/2016-08-29
Subject to change without notice

IMP12

- **Connection:** male connector M12, 4-pin

Housing length	Sensing range S_n	Output function	Output type	Connection diagram	Type	Part no.
56 mm	1.5 mm	Complementary	NPN	Cd-006	IMP12-1B5NPVC0B	6050118
			PNP	Cd-006	IMP12-1B5PPVC0B	6050117
		NC	NPN	Cd-008	IMP12-1B5NOVC0B	6050116
			PNP	Cd-008	IMP12-1B5POVC0B	6050114
		NO	NPN	Cd-007	IMP12-1B5NSVC0B	6050115
			PNP	Cd-007	IMP12-1B5PSVC0B	6050113
69 mm	1.5 mm	Complementary	NPN	Cd-006	IMP12-1B5NPVC0C	6050124
			PNP	Cd-006	IMP12-1B5PPVC0C	6050123
		NC	NPN	Cd-008	IMP12-1B5NOVC0C	6050122
			PNP	Cd-008	IMP12-1B5POVC0C	6050120
		NO	NPN	Cd-007	IMP12-1B5NSVC0C	6050121
			PNP	Cd-007	IMP12-1B5PSVC0C	6050119
78 mm	1.5 mm	Complementary	NPN	Cd-006	IMP12-1B5NPVC0D	6050130
			PNP	Cd-006	IMP12-1B5PPVC0D	6050129
		NC	NPN	Cd-008	IMP12-1B5NOVC0D	6050128
			PNP	Cd-008	IMP12-1B5POVC0D	6050126
		NO	NPN	Cd-007	IMP12-1B5NSVC0D	6050127
			PNP	Cd-007	IMP12-1B5PSVC0D	6050125
93 mm	1.5 mm	Complementary	NPN	Cd-006	IMP12-1B5NPVC0F	6050136
			PNP	Cd-006	IMP12-1B5PPVC0F	6050135
		NC	NPN	Cd-008	IMP12-1B5NOVC0F	6050134
			PNP	Cd-008	IMP12-1B5POVC0F	6050132
		NO	NPN	Cd-007	IMP12-1B5NSVC0F	6050133
			PNP	Cd-007	IMP12-1B5PSVC0F	6050131

IMP14

- **Connection:** male connector M12, 4-pin

Housing length	Sensing range S_n	Output function	Output type	Connection diagram	Type	Part no.
65 mm	3 mm	NC	NPN	Cd-008	IMP14-03BNOVC0S	6050140
			PNP	Cd-008	IMP14-03BPOVC0S	6050138
		NO	NPN	Cd-007	IMP14-03BNSVC0S	6050139
			PNP	Cd-007	IMP14-03BPSVC0S	6050137

C

Dimensional drawings (Dimensions in mm (inch))

IMP05

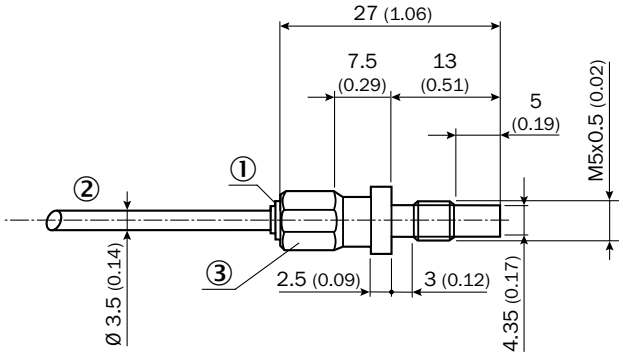

① Indication LED
② Cable, 3-wire
③ Width across 08

IMP08

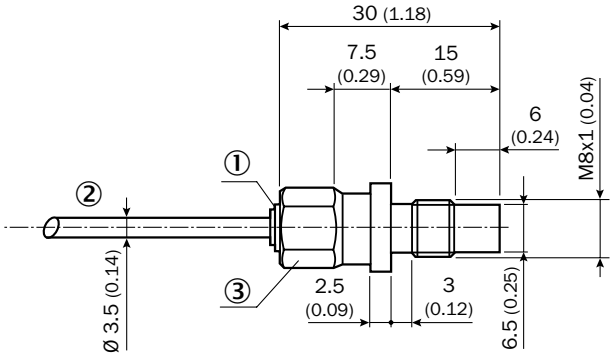

① Indication LED
② Cable, 3-wire
③ Width across 10

IMP12-xxxxxxxxB, 56 mm

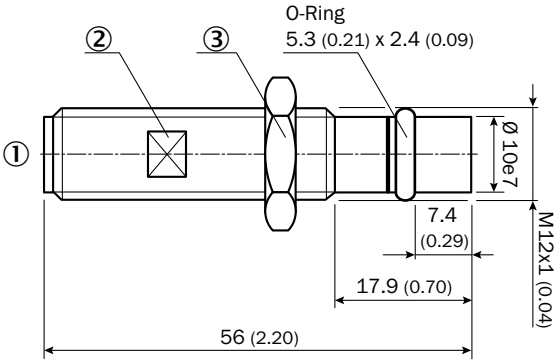

① Male connector M12, 4-pin
② Width across 10
③ Width across 17

IMP12-xxxxxxxxC, 69 mm

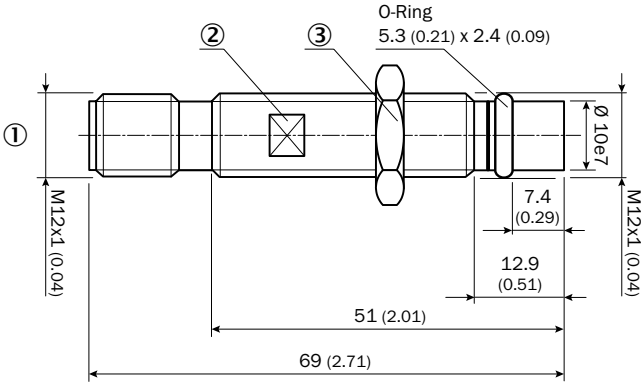

① Male connector M12, 4-pin
② Width across 10
③ Width across 17

IMP12-xxxxxxxxD, 78 mm

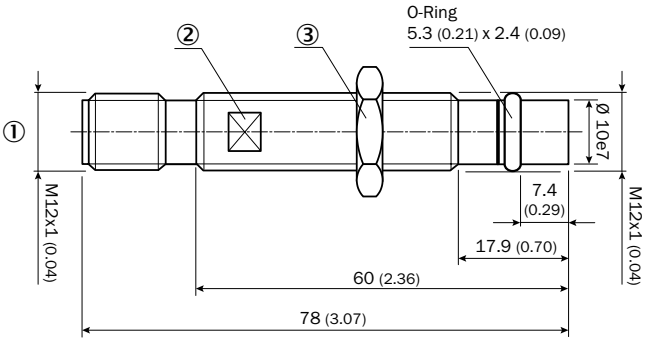

① Male connector M12, 4-pin
② Width across 10
③ Width across 17

IMP12-xxxxxxxxF, 93 mm

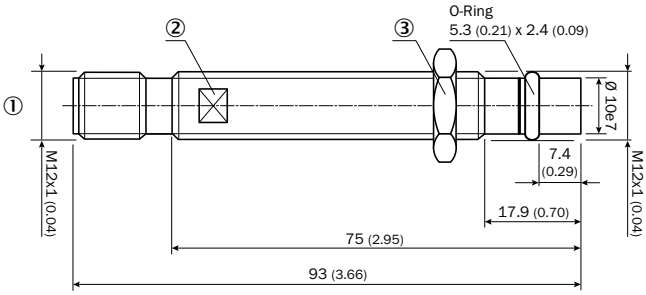

① Male connector M12, 4-pin
② Width across 10
③ Width across 17

IMP14

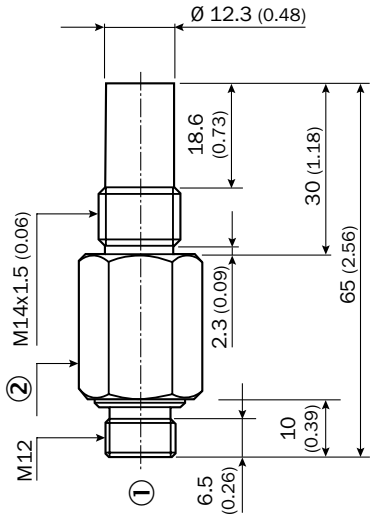

① Male connector M12, 4-pin
② Width across 19

Connection diagram

Cd-001

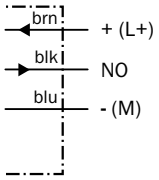

Cd-006

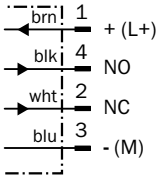

Cd-007

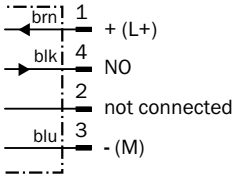

Cd-008

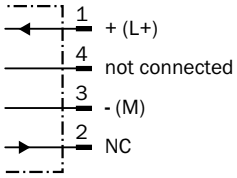

C

Installation note

Flush installation

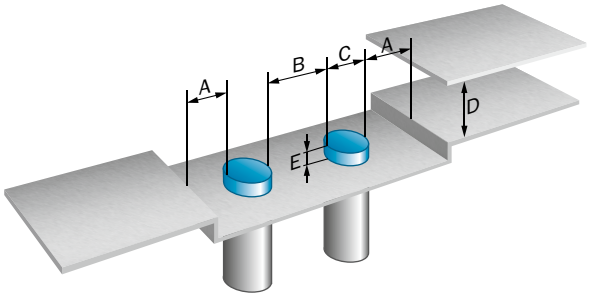

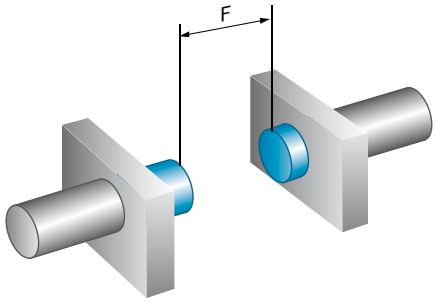

C

	Sensing range Sn	Installation type	A	B	C	D	E	F
IMP05	1 mm	Flush	1.5 mm	5 mm	5 mm	3 mm	0 mm	8 mm
IMP08	1,5 mm	Flush	2 mm	6 mm	8 mm	4.5 mm	0 mm	12 mm
IMP12	1,5 mm	Flush	0 mm	8 mm	12 mm	5 mm	-	12 mm

Assembly note

IMP12-xxxxxxxxF, 93 mm

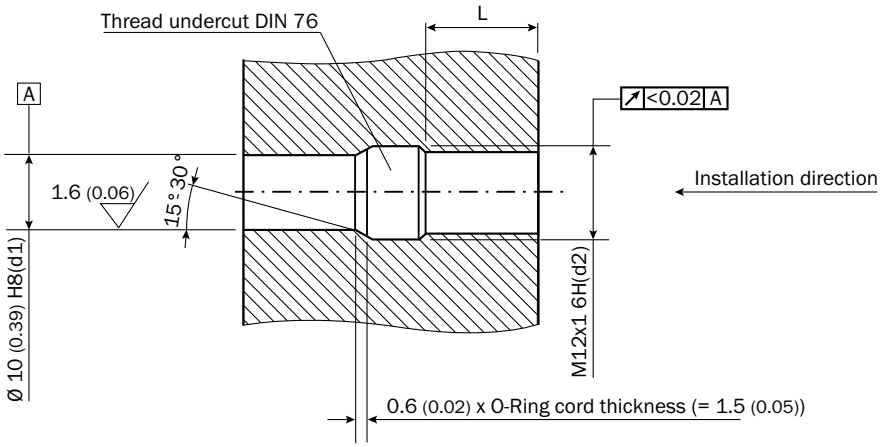

L: recommended installation depth: L≥ 0.8 (0.03) x d2

IMP12-xxxxxxxxF, 93 mm

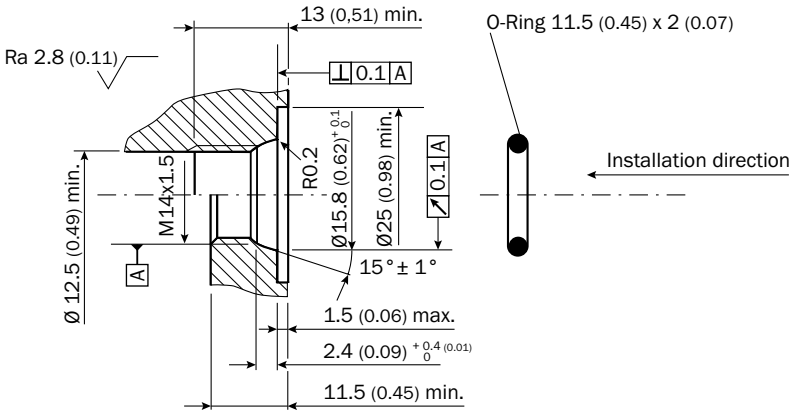

Accessories

Mounting systems

Other mounting accessories

Others

Type	Part no.
O-ring IMP05	5327492
O-ring IMP08	5327493
O-ring IMP12	5327494
O-ring IMP14	5327495
Support ring IMP12	5327496

Figure	Accessory	Page
	Plug connectors and cables	➜ H-267
	Mounting systems	➜ H-258
	Further accessories	➜ H-280

C

THE SIMPLE AND INTELLIGENT WAY OF SPEED MONITORING

C

Product description

The SAM sensor is the simple and intelligent way of speed monitoring with an additional IO-Link interface. SAM can be used as a classic speed monitor or innovative acceleration monitor with a revolutionary speed-independent monitoring function. It checks if an adjustable speed or acceleration threshold is crossed and provides a switching signal. SAM is setting new standards and revolutionizing commissioning tasks and fields of application thanks to its fast response time, monitored range of up to 12,000 pulses per minute and intelligent start-up delay.

At a glance

- Types: M18 and M30
- Sensing ranges of up to 10 mm flush
- Speed and acceleration monitoring
- Monitoring range: 6 to 12,000 pulses/min. and 0.1 to 2 pulses/sec.[2]
- Switching and pulse output
- Intelligent start-up delay
- Speed monitoring can be flexibly configured via two thresholds
- Flexible sensor settings, monitoring, extended diagnostics, and visualization thanks to IO-Link

Your benefits

- Speed-independent detection of speed changes
- Faster detection of speed changes than conventional speed monitors
- No readjustment after speed changes necessary
- Precise and convenient configuration via software
- IO-Link provides easy data access from the PLC
- No time-consuming, individual configuration of start-up delay feature necessary
- Reliable output signal thanks to adjustable speed thresholds (hysteresis)
- No expensive counter cards necessary in PLC

IO-Link

Additional information

Detailed technical data C-137
Ordering information C-138
Dimensional drawings C-139
Connection diagram C-139
Installation note C-139
Speed monitoring C-140
Acceleration monitoring C-140
Start-up delay C-140
Limit values C-140
Accessories C-141

→ www.sick.com/SAM

For more information, simply enter the link or scan the QR code and get direct access to technical data, CAD design models, operating instructions, software, application examples, and much more.

8014939/2016-08-29
Subject to change without notice

Detailed technical data

Features

	SAM M18	SAM M30
Housing	Cylindrical thread design	
Thread size	M18 x 1	M30 x 1.5
Sensing range S_n	7 mm	10 mm
Installation type	Flush	
Output type	PNP	
Output Q_{Imp}	Pulse output (pulse train corresponds to the activation rate)	
Output Q	Output type (dependant on the adjusted threshold)	
Output function	NO	
Electrical wiring	DC 4-wire	
Speed range, adjustable via 2 thresholds [1]	6 ... 12,000 pulses/min	
Acceleration range, adjustable [2]	0.1 ... 2 pulses/s²	
Time delay, adjustable	Mode 0: No start-up delay, Mode 1: 0...254 s, configurable, Mode 2: When reaching the upper threshold	
Enclosure rating [3]	IP 67	
Special features	Speed monitor	

[1] Up to a max. pulse sequence of 12,000 pulses / min.
[2] Up to a max. pulse sequence of 1.200 pulses / min.
[3] According to EN 60529.

Mechanics/electronics

	SAM M18	SAM M30
Supply voltage	10 V DC ... 30 V DC	
Ripple	≤ 10 %	
Voltage drop	≤ 2 V [1] / ≤ 2.5 V [1] (depending on type)	≤ 2.5 V [1]
Current consumption	≤ 10 mA [2] / ≤ 35 mA [2] (depending on type)	≤ 35 mA [2]
Hysteresis [3]	5 % ... 15 %	
Repeatability [4] [5]	≤ 2 %	
Temperature drift (of S_r)	± 10 %	
EMC	According to EN 60947-5-2	
Continuous current I_a	≤ 100 mA	
Connection type	Male connector, M12	
Short-circuit protection	✔	
Reverse polarity protection	✔	
Power-up pulse protection	✔	
Shock and vibration resistance	30 g, 11 ms/10 Hz ... 55 Hz, 1 mm	
Status indicator Q_{Imp}	LED, green / LED, yellow (depending on type)	LED, yellow
Status indicator Q	LED, yellow / LED, blau (depending on type)	LED, blau
Ambient operating temperature	–25 °C ... +75 °C	
Housing material	Nickel-plated brass	
Sensing face material	Plastic, PA6	
Tightening torque, max.	≤ 40 Nm	≤ 100 Nm

[1] At I_a max.
[2] Without load.
[3] Of S_n.
[4] Ub and Ta constant.
[5] Of Sr.

C

C

Reduction factors

Note	The values are reference values which may vary
St37 steel (Fe)	1
Stainless steel (V2A, 304)	0.8
Aluminum (Al)	0.45
Copper (Cu)	0.4
Brass (Br)	0.4

Fieldbus, industrial network

	SAM M18	SAM M30
Minimum response time	Mode speed monitoring 50 ms, Mode acceleration monitoring 1 sec	
Factory setting	Operating mode: acceleration monitoring, Upper/lower threshold speed: 200/300 pulses/min, Threshold acceleration: 1 pulse/sec², Start-up delay mode: time delay, Time delay: 5 sec	
Fieldbus integration	IO-Link V1.0	
Mode	COM 2 (38k4)	
Cycle time	2.3 ms / 5 ms (depending on type)	5 ms
Process data length	16 Bit	
Process data structure	14 bit measured value, 1 bit pulse output, 1 bit switching output	

Ordering information

Other models ➜ www.sick.com/SAM

SAM M18

- **Housing:** M18 x 1
- **Connection:** Male connector M12, 4-pin
- **Voltage drop:** ≤ 2.5 V (at Ia max.)
- **Power consumption:** ≤ 35 mA (without load)

Sensing range S_n	Speed range, adjustable via 2 thresholds	Connection diagram	Type	Part no.
7 mm	6 ... 12,000 pulses/min [1]	Cd-226	IMC18-07BPDZC-0SA05	1061987

[1] Up to a max. pulse sequence of 12,000 pulses / min.

SAM M30

- **Housing:** M30 x 1.5
- **Connection:** Male connector M12, 4-pin
- **Voltage drop:** ≤ 2.5 V (at Ia max.)
- **Power consumption:** ≤ 35 mA (without load)

Sensing range S_n	Speed range, adjustable via 2 thresholds	Connection diagram	Type	Part no.
10 mm	6 ... 12,000 pulses/min [1]	Cd-226	IMC30-10BPDZC-0SA05	1061704

[1] Up to a max. pulse sequence of 12,000 pulses / min.

Dimensional drawings (Dimensions in mm (inch))

SAM M18 Standard, connector, flush

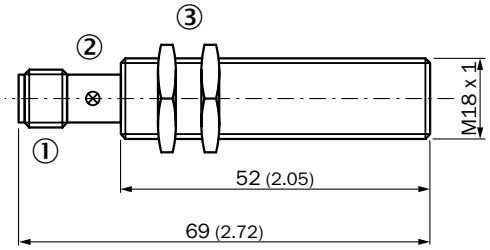

① Connection
② Indication LED
③ Fastening nuts (2x); width across 24, metal

SAM M30 Standard, connector, flush

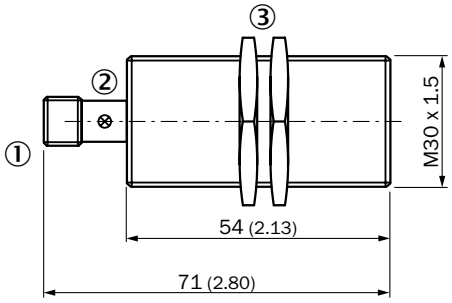

① Connection
② Indication LED
③ Fastening nuts (2x); width across 36, metal

C

Connection diagram

Cd-226

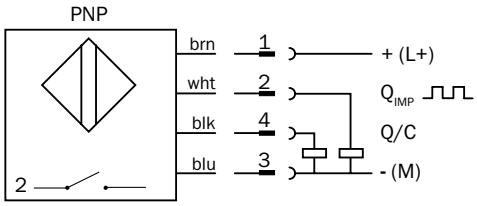

Installation note

Flush installation

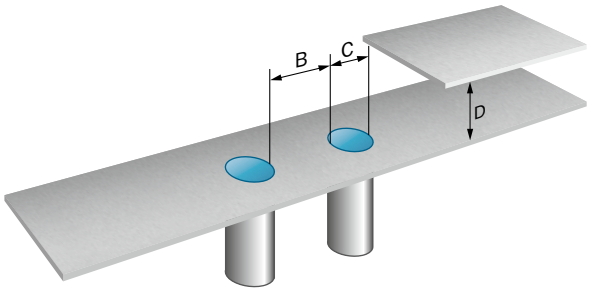

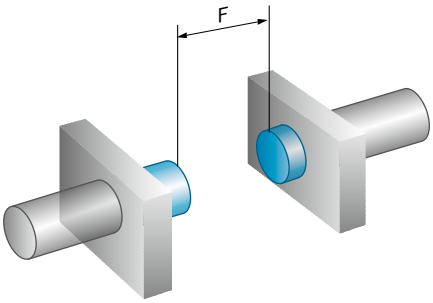

	Sensing range Sn	Installation type	A	B	C	D	E	F
IMC18	7 mm	Flush	-	18 mm	18 mm	18 mm	-	56 mm
IMC30	10 mm	Flush	-	30 mm	30 mm	30 mm	-	80 mm

C

Speed monitoring

Switching signal is activated when the upper speed threshold set for the pulse sequence is exceeded.

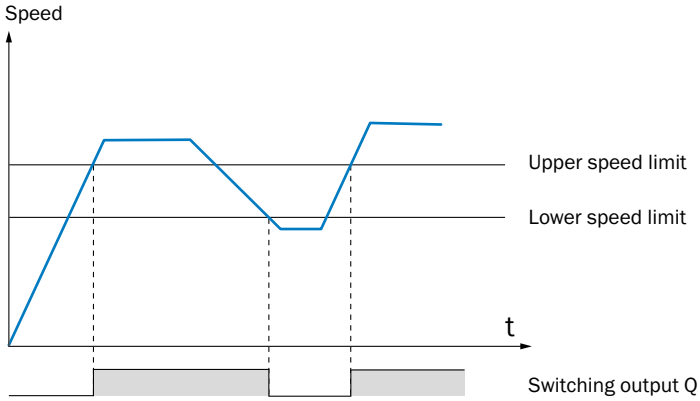

① Connection
② Indication LED
③ Fastening nuts (2x); width across 24, metal

Acceleration monitoring

Switching signal is activated when the acceleration threshold set for the change in pulse sequences is exceeded.

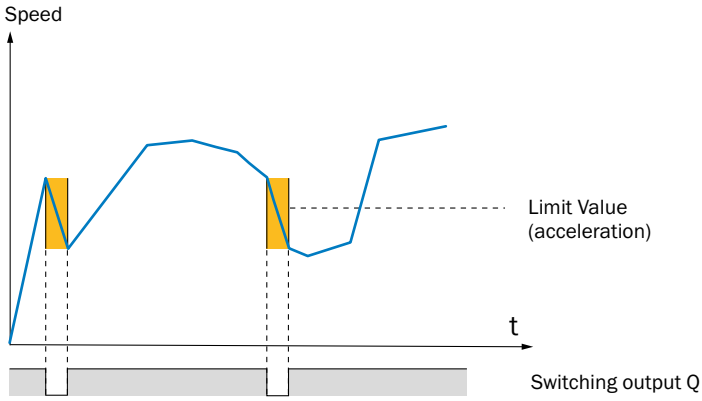

Start-up delay

The start-up delay is activated when the operating voltage is applied.

Off:
Start-up delay is not active.

Time delay:
The start-up delay activates the switching output for a time delay within a programmable range from 0 to 254 s.

Upper limit:
The start-up delay activates the switching output until the upper speed threshold is reached.

Limit values

Upper speed limit:
Switching output Q is activated when the upper threshold value is exceeded. The lower threshold value can range from 6 to 12,000 pulses/min.

Lower speed limit:
Switching output Q is activated when the deceleration value is exceeded. The lower threshold value can range from 6 to 12,000 pulses/min.

Acceleration:
Switching output Q is activated when the deceleration value is exceeded. The deceleration value can range from 0.1 to 2 pulses/min.

Accessories

Connection systems

Modules and gateways

Fieldbus modules

Figure	Brief description	Type	Part no.
Illustration may differ	EtherCAT IO-Link Master, IO-Link V1.1, power supply via 7/8'' cable 24 V / 8 A, fieldbus connection via M12 cable	IOLG2EC-03208R01 (IO-Link Master)	6053254
Illustration may differ	EtherNet/IP IO-Link Master, IO-Link V1.1, power supply via 7/8'' cable 24 V / 8 A, fieldbus connection via M12-cable	IOLG2EI-03208R01 (IO-Link Master)	6053255
	PROFINET IO-Link Master, IO-Link V1.1, Class A port, power supply via 7/8'' cable 24 V / 8 A, fieldbus connection via M12 cable	IOLG2PN-03208R01 (IO-Link Master)	6053253
	Number of IO-Link ports: 4; Communication mode: COM1/COM2; IO-Link version: IO-Link V1.0; Switching input: PNP; Supply voltage Vs, IO-Link ports: DC 24 V; Current loading: 800 mA; Data transmission rate: Max. 12 MBaud, Autobaud; Address space occupation: 1 bis 126; Connection type: Connector M12; Connection type, IO-Link ports: Connector M12, 5-pin; Suppyl voltage Vs, module: DC 18 ... 30 V; Power consumption: Typ. 75 mA / max. 100 mA (at UL with DC 24 V), Typ. 25 mA + sensor current / max. 80	IOLSHPB-P3104R01	6039728

Figure	Accessory	Page
	Plug connectors and cables	➜ H-267
	Mounting systems	➜ H-258
	Further accessories	➜ H-280

RECTANGULAR MINIATURE SENSORS FOR USE IN INDUSTRIAL ENVIRONMENTS

C

Product description

The IQM sensors with their rectangular miniature designs are real space-savers. Thanks to the low heights of a minimum of 4.7 mm and fully-integrated electronics, they set new standards and contribute to the miniaturization of modules and machines. Extended sensing ranges of up to 3 mm enable reliable position queries even in challenging applications. The IQM sensors can be permanently installed quickly with only one screw.

At a glance

- Types: 8 mm x 16 mm x 4 mm or 10 mm x 30 mm x 6 mm
- Extended sensing ranges: 1.5 mm to 3 mm
- Electrical configuration: DC 3-wire
- Enclosure rating: IP 67
- Temperature range: –20 °C to +70 °C
- Plastic housing
- Flat, space-saving and light design

Your benefits

- Easy installation in applications with limited available space
- Reliable detection of fast handling and mounting processes
- High positioning accuracy and precise switching behavior
- Great freedom with respect to machine design thanks to the lower height
- Low weight enables fast acceleration in dynamic handling processes
- Quick and reliable mounting with just one screw

Additional information

Detailed technical data C-143
Ordering information C-144
Dimensional drawings C-144
Connection diagram. C-145
Installation note C-145
Accessories. C-145

➜ www.sick.com/IQM

For more information, simply enter the link or scan the QR code and get direct access to technical data, CAD design models, operating instructions, software, application examples, and much more.

8014939/2016-08-29
Subject to change without notice

Detailed technical data

Features

	IQ04	IQ06
Housing	Rectangular	
Dimensions (W x H x D)	8 mm x 16 mm x 4 mm	10 mm x 30 mm x 6 mm
Sensing range S_n	1.5 mm	3 mm
Installation type	Flush	
Switching frequency	600 Hz	1,000 Hz
Output type	PNP / NPN (depending on type)	
Output function	NO / NC (depending on type)	
Electrical wiring	DC 3-wire	
Enclosure rating [1]	IP 67	

[1] According to EN 60529.

C

Mechanics/electronics

	IQ04	IQ06
Supply voltage	10 V DC ... 30 V DC	
Ripple [1]	≤ 10 %	
Voltage drop [2]	< 1.5 V	
Current consumption [3]	10 mA	
Time delay before availability	≤ 10 ms	
Hysteresis	1 % ... 15 %	
Repeatability [4] [5]	± 1 %	
Temperature drift (of S_r)	± 10 %	
EMC	According to EN 60947-5-2	
Continuous current I_a	≤ 100 mA	
Connection type	Cable, 2 m, PVC	Cable, 2 m, PUR
Short-circuit protection	✔	
Shock and vibration resistance	30 g, 11 ms / 10 ... 55 Hz, 1 mm	
Ambient operating temperature	–25 °C ... +70 °C	
Sensing face material	Plastic, PA6-GF30	
Tightening torque, max.	0.06 Nm	

[1] Of V_S.
[2] At I_a max.
[3] Without load.
[4] Ub and Ta constant.
[5] Of Sr.

Reduction factors

Note	The values are reference values which may vary
Stainless steel (V2A, 304)	Approx. 0.7
Aluminum (Al)	Approx. 0.4
Copper (Cu)	Approx. 0.3
Brass (Br)	Approx. 0.4

Ordering information

Other models ➔ www.sick.com/IQM

IQ04

- **Housing:** 8 mm x 16 mm x 4 mm

Sensing range S_n	Output function	Output type	Connection	Connection diagram	Type	Part no.
1.5 mm	NC	NPN	Cable, 3-wire, 2 m, PVC	Cd-003	IQ04-1B5NOKW2S	6042020
		PNP	Cable, 3-wire, 2 m, PVC	Cd-003	IQ04-1B5POKW2S	6042018
	NO	NPN	Cable, 3-wire, 2 m, PVC	Cd-001	IQ04-1B5NSKW2S	6042019
		PNP	Cable, 3-wire, 2 m, PVC	Cd-001	IQ04-1B5PSKW2S	6042017

C

IQ06

- **Housing:** 10 mm x 30 mm x 6 mm

Sensing range S_n	Output function	Output type	Connection	Connection diagram	Type	Part no.
3 mm	NC	NPN	Cable, 3-wire, 2 m, PUR	Cd-003	IQ06-03BNOKU2S	6042025
		PNP	Cable, 3-wire, 2 m, PUR	Cd-003	IQ06-03BPOKU2S	6042023
	NO	NPN	Cable, 3-wire, 2 m, PUR	Cd-001	IQ06-03BNSKU2S	6042024
		PNP	Cable, 3-wire, 2 m, PUR	Cd-001	IQ06-03BPSKU2S	6042022

Dimensional drawings (Dimensions in mm (inch))

IQ04

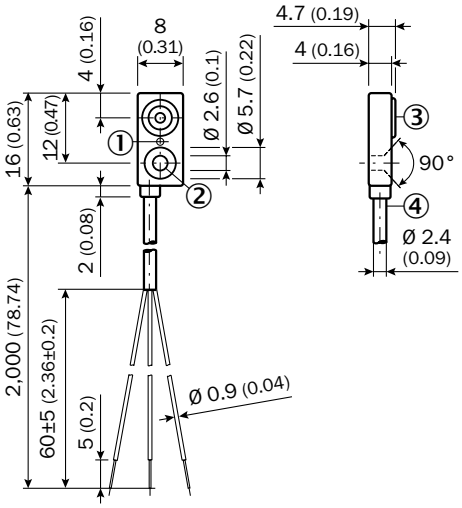

① Function indicator (red)
② Fixing hole
③ Sensing face
④ Connection

IQ06

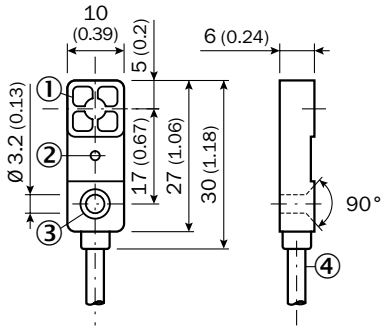

① Sensing face
② Function indicator (red)
③ Fixing hole
④ Connection

8014939/2016-08-29
Subject to change without notice

Connection diagram

Cd-001

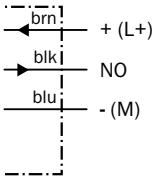

Cd-003

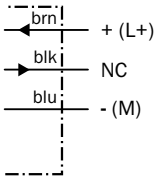

Installation note

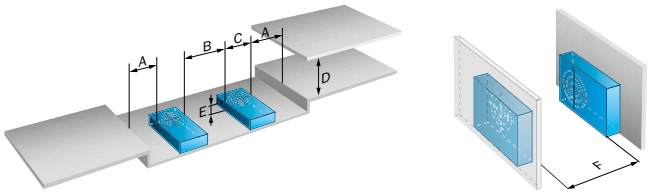

	Sensing range Sn	Installation type	A	B	C	D	E	F
IQ04	1.5 mm	Flush	0 mm	16 mm	8 mm	4.5 mm	0 mm	24 mm
IQ06	3 mm	Flush	1.5 mm	20 mm	10 mm	9 mm	0 mm	30 mm

Accessories

Figure	Accessory	Page
	Plug connectors and cables	➜ H-267
	Mounting systems	➜ H-258
	Further accessories	➜ H-280

C

SLIM RECTANGULAR HOUSINGS FOR USE IN INDUSTRIAL ENVIRONMENTS

C

Product description

With slim dimensions of just 5 mm x 5 mm or 8 mm x 8 mm, the IQY sensors offer up to 4 mm in sensing range, thereby providing the best performance while taking up the least possible space. Integration into linear units or confined installation spaces is no problem. State-of-the-art SICK-ASIC technology and an output state display that is visible from all angles makes a simple solution for modern handling and automation tasks, ensuring the highest levels of production reliability. No matter whether in VISTAL™ or metal housing, the sensors of the IQV product family rise to every challenge with ease.

At a glance

- Types: 5 mm x 5 mm x 25 mm or 8 mm x 8 mm x 40 mm
- Extended sensing ranges: 0.8 mm to 4 mm
- Electrical configuration: DC 3-wire
- Enclosure rating: IP 67 or IP 68
- Temperature range: –25 °C to +75 °C
- Tough VISTAL™ housing
- Thin version with 270° output state display

Your benefits

- Easy integration in space-critical applications
- Reliable detection of fast handling and mounting processes
- Quick and easy mounting
- Thin housing provides a high degree of design freedom

Additional information

Detailed technical data C-147
Ordering information C-148
Dimensional drawings C-149
Connection diagram. C-149
Installation note C-150
Accessories. C-150

➜ www.sick.com/IQY

For more information, simply enter the link or scan the QR code and get direct access to technical data, CAD design models, operating instructions, software, application examples, and much more.

8014939/2016-08-29
Subject to change without notice

Detailed technical data

Features

	IQ05	IQ08
Housing	Rectangular	
Dimensions (W x H x D)	5 mm x 5 mm x 25 mm	8 mm x 8 mm x 40 mm
Sensing range S_n		
Flush	0.8 mm	2 mm
Non-flush	–	4 mm
Installation type	Flush	Flush / non-flush (depending on type)
Switching frequency	5,000 Hz	2,000 Hz
Output type	PNP / NPN (depending on type)	
Output function	NO / NC (depending on type)	
Electrical wiring	DC 3-wire	
Enclosure rating [1]	IP 67	

[1] According to EN 60529.

C

Mechanics/electronics

	IQ05	IQ08
Supply voltage	10 V DC ... 30 V DC	
Ripple [1]	≤ 20 %	≤ 10 %
Voltage drop [2]	≤ 2 V	
Current consumption [3]	≤ 10 mA	
Time delay before availability	≤ 10 ms	≤ 100 ms
Hysteresis	1 % ... 10 %	5 % ... 15 %
Repeatability	≤ 1.5 % [4]	≤ 2 % [5] [6]
Temperature drift (of S_r)	± 10 %	
EMC	According to EN 60947-5-2	
Continuous current I_a	≤ 200 mA	
Connection type	Cable, 2 m, PUR	Cable, 2 m, PVC / Male connector, M8 (depending on type)
Short-circuit protection	✔	
Reverse polarity protection	✔	
Power-up pulse protection	✔	
Shock and vibration resistance	30 g, 11 ms / 10 ... 55 Hz, 1 mm	
Ambient operating temperature	–25 °C ... +70 °C	–25 °C ... +75 °C
Housing material	Chrome-plated brass	Plastic, VISTAL™
Sensing face material	Plastic, Polyester	Plastic, VISTAL™
Tightening torque, max.	–	≤ 1.5 Nm

[1] Of V_S.
[2] At I_a max.
[3] Without load.
[4] Ub = 20 V DC ... 30 V DC, Ta = 23 °C ± 5 °C.
[5] Ub and Ta constant.
[6] Of Sr.

C

Reduction factors

	IQ05	IQ08
Note	The values are reference values which may vary	
Stainless steel (V2A, 304)	Approx. 0.85	Approx. 0.7
Aluminum (Al)		
Flush	Approx. 0.6	Approx. 0.3
Non-flush	–	Approx. 0.5
Copper (Cu)		
Flush	Approx. 0.6	Approx. 0.2
Non-flush	–	Approx. 0.4
Brass (Br)		
Flush	Approx. 0.7	Approx. 0.3
Non-flush	–	Approx. 0.5

Ordering information

Other models ➔ www.sick.com/IQY

IQ05

- **Housing:** 5 mm x 5 mm x 25 mm

Sensing range S_n	Installation type	Output function	Output type	Connection	Connection diagram	Type	Part no.
0.8 mm	Flush	NC	PNP	Cable, 3-wire, 2 m, PUR	Cd-003	IQ05-0B8PO-ZU1	6020163
		NO	NPN	Cable, 3-wire, 2 m, PUR	Cd-001	IQ05-0B8NS-ZU1	6020162
			PNP	Cable, 3-wire, 2 m, PUR	Cd-001	IQ05-0B8PS-ZU1	6020161

IQ08

- **Housing:** 8 mm x 8 mm x 40 mm

Sensing range S_n	Installation type	Output function	Output type	Connection	Connection diagram	Type	Part no.
2 mm	Flush	NC	NPN	Cable, 3-wire, 2 m, PVC	Cd-003	IQ08-02BNOKW2S	1055493
				Connector M8, 3-pin	Cd-004	IQ08-02BNOKT0S	1055497
			PNP	Cable, 3-wire, 2 m, PVC	Cd-003	IQ08-02BPOKW2S	1055491
				Connector M8, 3-pin	Cd-004	IQ08-02BPOKT0S	1055495
		NO	NPN	Cable, 3-wire, 2 m, PVC	Cd-001	IQ08-02BNSKW2S	1055492
				Connector M8, 3-pin	Cd-002	IQ08-02BNSKT0S	1055496
			PNP	Cable, 3-wire, 2 m, PVC	Cd-001	IQ08-02BPSKW2S	1055490
				Connector M8, 3-pin	Cd-002	IQ08-02BPSKT0S	1055494
4 mm	Non-flush	NC	NPN	Cable, 3-wire, 2 m, PVC	Cd-003	IQ08-04NNOKW2S	1055501
				Connector M8, 3-pin	Cd-004	IQ08-04NNOKT0S	1055505
			PNP	Cable, 3-wire, 2 m, PVC	Cd-003	IQ08-04NPOKW2S	1055499
				Connector M8, 3-pin	Cd-004	IQ08-04NPOKT0S	1055503
		NO	NPN	Cable, 3-wire, 2 m, PVC	Cd-001	IQ08-04NNSKW2S	1055500
				Connector M8, 3-pin	Cd-002	IQ08-04NNSKT0S	1055504
			PNP	Cable, 3-wire, 2 m, PVC	Cd-001	IQ08-04NPSKW2S	1055498
				Connector M8, 3-pin	Cd-002	IQ08-04NPSKT0S	1055502

C

Dimensional drawings (Dimensions in mm (inch))

IQ05

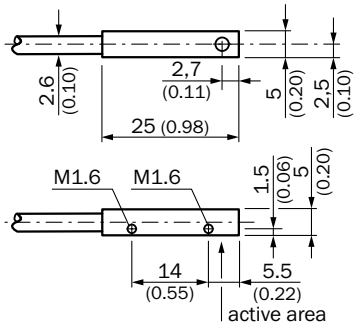

IQ08, cable

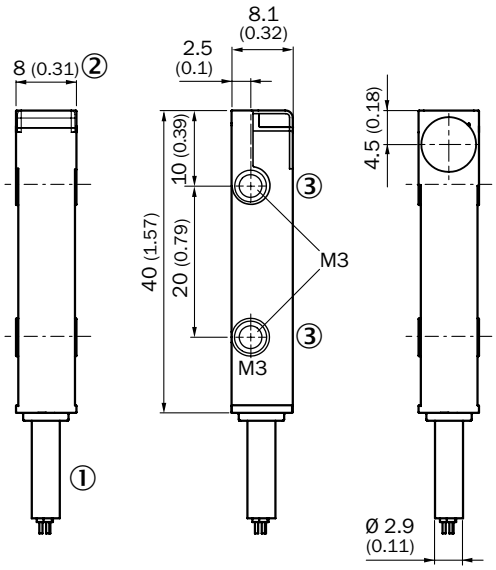

① Connection
② LED indicator 270°
③ Threaded mounting hole M3

IQ08, connector

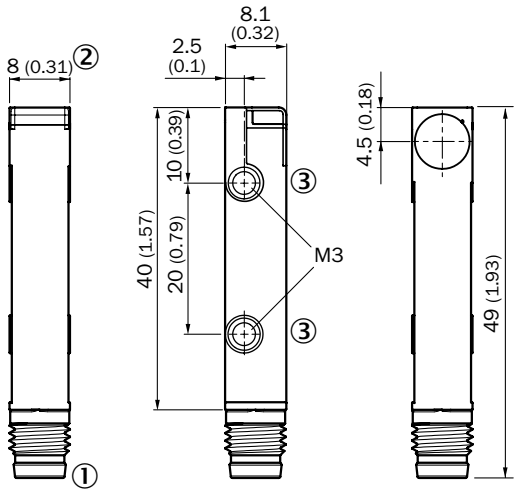

① Connection
② LED indicator 270°
③ Threaded mounting hole M3

Connection diagram

Cd-001

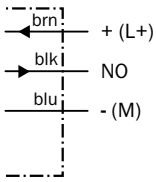

Cd-002

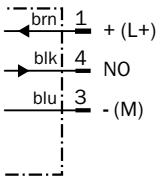

Cd-003

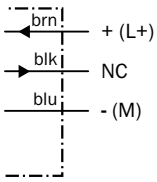

Cd-004

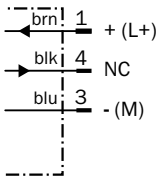

C

Installation note

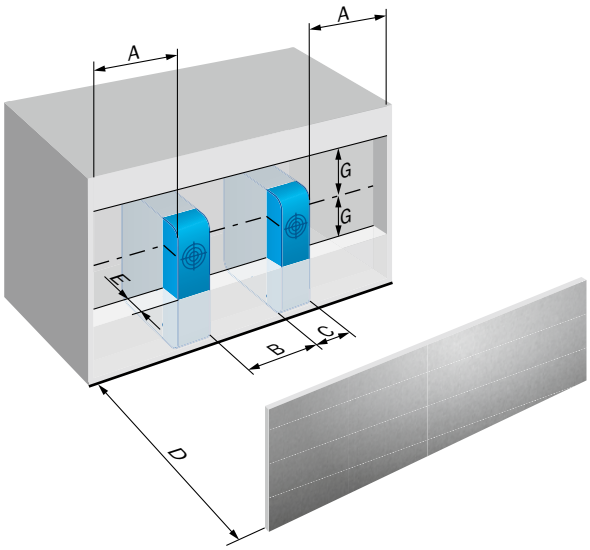

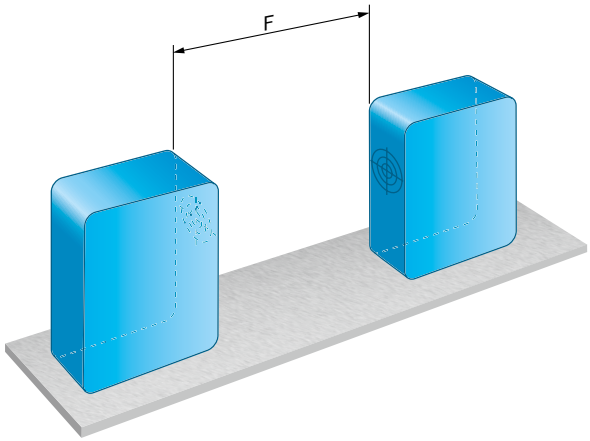

	Sensing range Sn	Installation type	A	B	C	D	E	F	G
IQ05-0B8xx-xxx	0,8 mm	Flush	0.8 mm	0 mm	5 mm	2.4 mm	0 mm	7 mm	3.3 mm
IQ08-02Bxxxxxx	2 mm	Flush	0 mm	10 mm	8 mm	6 mm	0 mm	16 mm	0 mm
IQ08-04Nxxxxxx	4 mm	Non-flush	4 mm	24 mm	8 mm	12 mm	20 mm	32 mm	8 mm

Accessories

Figure	Accessory	Page
	Plug connectors and cables	→ H-267
	Mounting systems	→ H-258
	Further accessories	→ H-280

8014939/2016-08-29
Subject to change without notice

C

SMALL RECTANGULAR HOUSINGS FOR USE IN INDUSTRIAL ENVIRONMENTS

C

Additional information

Detailed technical data C-153
Ordering information C-154
Dimensional drawings C-155
Connection diagram. C-156
Installation note C-157
Accessories. C-157

Product description

Compact design with best-in-class performance. The IQB sensors offer extended sensing ranges of up to 8 mm and state-of-the-art SICK-ASIC technology. Its proven, reliable design with 270° status display is also ideal for more demanding applications. Extremely rugged VISTAL™ housing, innovative hotmelt molding and an IP 68 enclosure rating make the sensors of the IQB product family the first choice for a wide range of applications and ensure the highest possible levels of process reliability and satisfaction.

At a glance

- Types: 10 mm x 16 mm x 28 mm or 12 mm x 26 mm x 40 mm
- Extended sensing ranges: 2 mm to 8 mm
- Electrical configuration: DC 3-/4-wire
- Enclosure rating: IP 68
- Temperature range: –25 °C to +75 °C
- Tough VISTAL™ housing
- Small version with 270° output state display

Your benefits

- Best mechanical and electronic stability for extra-long service life
- Highest levels of process reliability for your application
- Long service life that reduce maintenance costs thanks to SICK's ASIC technology and rugged VISTAL™ housing
- Precise detection and high sensor accuracy enable fast handling and assembly processes
- Space-saving integration in every application
- High resistance to shock and vibrations reduces maintenance costs
- Quick viewing of sensor status from any position in the room reduces maintenance costs
- Safe, fast mounting without any need for readjustment saves installation time and maintenance costs

→ www.sick.com/IQB

For more information, simply enter the link or scan the QR code and get direct access to technical data, CAD design models, operating instructions, software, application examples, and much more.

8014939/2016-08-29
Subject to change without notice

Detailed technical data

Features

	IQ10	IQ12
Housing	Rectangular	
Dimensions (W x H x D)	10 mm x 16 mm x 28 mm	12 mm x 26 mm x 40 mm
Sensing range S_n		
Flush	3 mm	4 mm
Non-flush	6 mm	8 mm
Installation type	Flush / non-flush (depending on type)	
Switching frequency	2,000 Hz	
Output type	PNP / NPN (depending on type)	
Output function	NO / NC / Complementary (depending on type)	
Electrical wiring	DC 3-wire / DC 4-wire (depending on type)	
Enclosure rating [1]	IP 68	

[1] According to EN 60529.

C

Mechanics/electronics

	IQ10	IQ12
Supply voltage	10 V DC ... 30 V DC	
Ripple [1]	≤ 10 %	
Voltage drop		
DC 3-wire	≤ 2 V [2]	≤ 3 V [2]
DC 4-wire [2]	≤ 3 V	
Current consumption		
DC 3-wire	≤ 10 mA [3]	≤ 20 mA [3]
DC 4-wire [2]	≤ 20 mA [3]	
Time delay before availability	≤ 100 ms	
Hysteresis	5 % ... 15 %	
Repeatability [4] [5]	≤ 2 %	
Temperature drift (of S_r)	± 10 %	
EMC	According to EN 60947-5-2	
Continuous current I_a	≤ 200 mA	
Connection type	Cable, 2 m, PVC / Male connector, M8 (depending on type)	
Short-circuit protection	✔	
Reverse polarity protection	✔	
Power-up pulse protection	✔	
Shock and vibration resistance	30 g, 11 ms / 10 ... 55 Hz, 1 mm	
Ambient operating temperature	–25 °C ... +75 °C	
Housing material	Plastic, VISTAL™	
Sensing face material	Plastic, VISTAL™	
Tightening torque, max.	≤ 1 Nm	

[1] Of V_S.
[2] At I_a max.
[3] Without load.
[4] Ub and Ta constant.
[5] Of Sr.

C

Reduction factors

	IQ10	IQ12
Note	The values are reference values which may vary	
Stainless steel (V2A, 304)	Approx. 0.7	
Aluminum (Al)		
Flush	Approx. 0.4	
Non-flush	Approx. 0.5	
Copper (Cu)		
Flush	Approx. 0.3	
Non-flush	Approx. 0.35	Approx. 0.4
Brass (Br)		
Flush	Approx. 0.5	Approx. 0.4
Non-flush	Approx. 0.5	

Ordering information

Other models ➔ www.sick.com/IQB

IQ10

- **Housing:** 10 mm x 16 mm x 28 mm

Sensing range S_n	Installation type	Electrical wiring	Output function	Output type	Connection	Connection diagram	Type	Part no.
3 mm	Flush	DC 3-wire	NO	PNP	Cable, 3-wire, 2 m, PVC	Cd-001	IQ10-03BPSKW2S	1055447
					Connector M8, 3-pin	Cd-002	IQ10-03BPSKT0S	1055453
				NPN	Cable, 3-wire, 2 m, PVC	Cd-001	IQ10-03BNSKW2S	1055450
					Connector M8, 3-pin	Cd-002	IQ10-03BNSKT0S	1055455
		DC 3-wire	NC	PNP	Cable, 3-wire, 2 m, PVC	Cd-003	IQ10-03BPOKW2S	1055449
					Connector M8, 3-pin	Cd-004	IQ10-03BPOKT0S	1055454
				NPN	Cable, 3-wire, 2 m, PVC	Cd-003	IQ10-03BNOKW2S	1055452
					Connector M8, 3-pin	Cd-004	IQ10-03BNOKT0S	1055456
		DC 4-wire	Comple-mentary	PNP	Cable, 4-wire, 2 m, PVC	Cd-005	IQ10-03BPPKW2S	1055465
				NPN	Cable, 4-wire, 2 m, PVC	Cd-005	IQ10-03BNPKW2S	1055466
6 mm	Non-flush	DC 3-wire	NO	PNP	Cable, 3-wire, 2 m, PVC	Cd-001	IQ10-06NPSKW2S	1055457
					Connector M8, 3-pin	Cd-002	IQ10-06NPSKT0S	1055461
				NPN	Cable, 3-wire, 2 m, PVC	Cd-001	IQ10-06NNSKW2S	1055459
					Connector M8, 3-pin	Cd-002	IQ10-06NNSKT0S	1055463
		DC 3-wire	NC	PNP	Cable, 3-wire, 2 m, PVC	Cd-003	IQ10-06NPOKW2S	1055458
					Connector M8, 3-pin	Cd-004	IQ10-06NPOKT0S	1055462
				NPN	Cable, 3-wire, 2 m, PVC	Cd-003	IQ10-06NNOKW2S	1055460
					Connector M8, 3-pin	Cd-004	IQ10-06NNOKT0S	1055464

IQ12

- **Housing:** 12 mm x 26 mm x 40 mm

Sensing range S_n	Installation type	Electrical wiring	Output function	Output type	Connection	Connection diagram	Type	Part no.
4 mm	Flush	DC 3-wire	NO	PNP	Cable, 3-wire, 2 m, PVC	Cd-001	IQ12-04BPSKW2S	1055428
					Connector M8, 3-pin	Cd-002	IQ12-04BPSKT0S	1055432
				NPN	Cable, 3-wire, 2 m, PVC	Cd-001	IQ12-04BNSKW2S	1055430
					Connector M8, 3-pin	Cd-002	IQ12-04BNSKT0S	1055434
		DC 3-wire	NC	PNP	Cable, 3-wire, 2 m, PVC	Cd-003	IQ12-04BPOKW2S	1055429
					Connector M8, 3-pin	Cd-004	IQ12-04BPOKT0S	1055433
				NPN	Cable, 3-wire, 2 m, PVC	Cd-003	IQ12-04BNOKW2S	1055431
					Connector M8, 3-pin	Cd-004	IQ12-04BNOKT0S	1055435
		DC 4-wire	Comple-mentary	PNP	Cable, 4-wire, 2 m, PVC	Cd-005	IQ12-04BPPKW2S	1055444
				NPN	Cable, 4-wire, 2 m, PVC	Cd-005	IQ12-04BNPKW2S	1055445
8 mm	Non-flush	DC 3-wire	NO	PNP	Cable, 3-wire, 2 m, PVC	Cd-001	IQ12-08NPSKW2S	1055436
					Connector M8, 3-pin	Cd-002	IQ12-08NPSKT0S	1055440
				NPN	Cable, 3-wire, 2 m, PVC	Cd-001	IQ12-08NNSKW2S	1055438
					Connector M8, 3-pin	Cd-002	IQ12-08NNSKT0S	1055442
		DC 3-wire	NC	PNP	Cable, 3-wire, 2 m, PVC	Cd-003	IQ12-08NPOKW2S	1055437
					Connector M8, 3-pin	Cd-004	IQ12-08NPOKT0S	1055441
				NPN	Cable, 3-wire, 2 m, PVC	Cd-003	IQ12-08NNOKW2S	1055439
					Connector M8, 3-pin	Cd-004	IQ12-08NNOKT0S	1055443

C

Dimensional drawings (Dimensions in mm (inch))

IQ10, cable

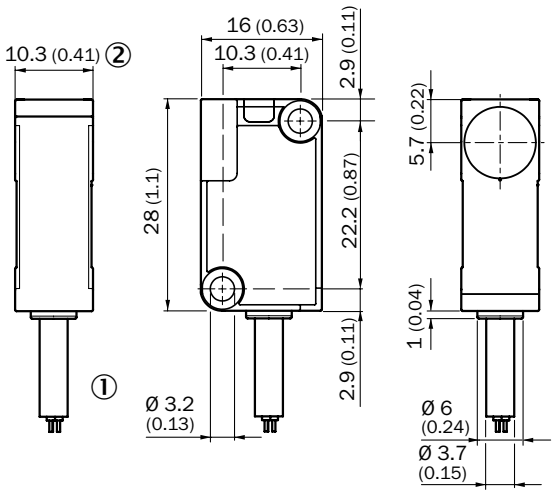

① Connection
② LED indicator 270°

IQ10, connector

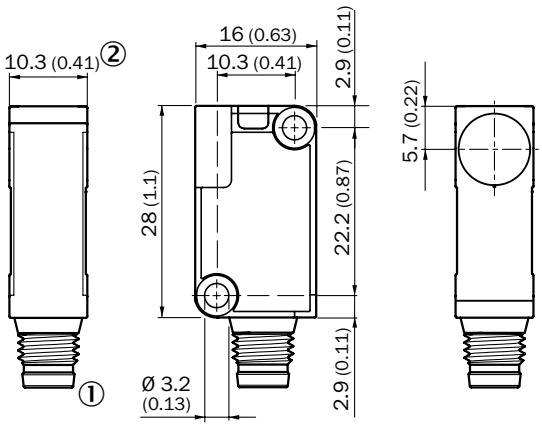

① Connection
② LED indicator 270°

IQ12, cable

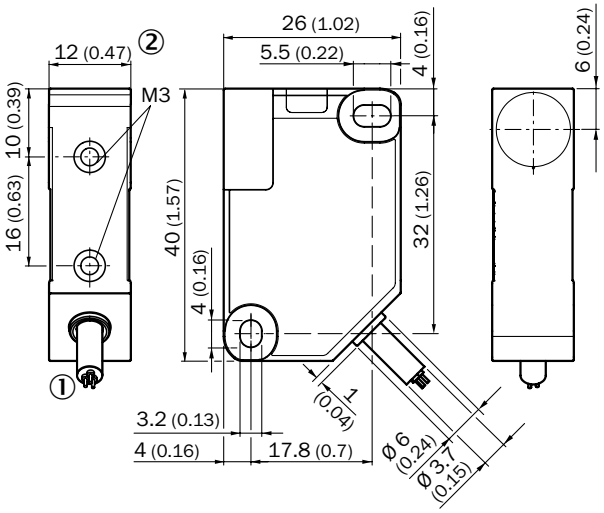

① Connection
② LED indicator 270°

IQ12, connector

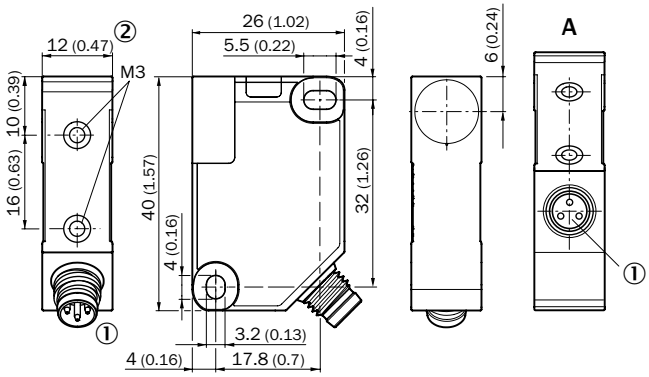

① Connection
② LED indicator 270°

C

Connection diagram

Cd-001

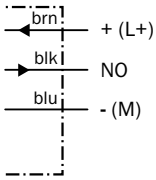

Cd-002

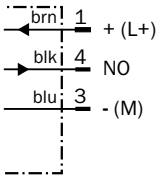

Cd-003

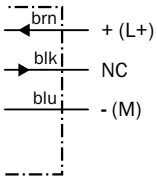

Cd-004

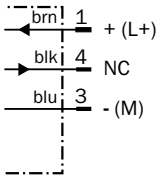

Cd-005

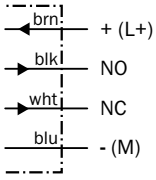

Installation note

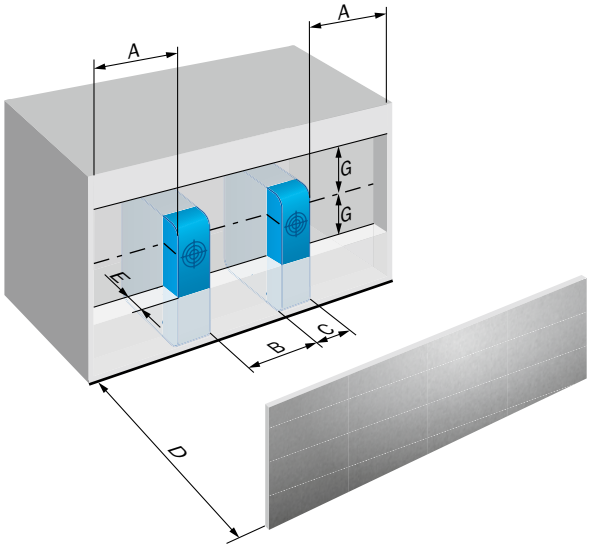

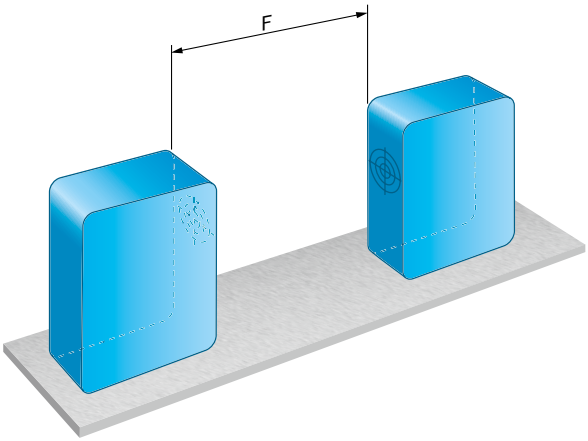

	Sensing range Sn	Installation type	A	B	C	D	E	F	G
IQ10-03Bxxxxxx	3 mm	Flush	0 mm	10 mm	10.3 mm	9 mm	0 mm	24 mm	0 mm
IQ10-06Nxxxxxx	6 mm	Non-flush	7 mm	30 mm	10.3 mm	18 mm	12 mm	48 mm	12 mm
IQ12-04Bxxxxxx	4 mm	Flush	0 mm	12 mm	12 mm	12 mm	0 mm	32 mm	0 mm
IQ12-08Nxxxxxx	8 mm	Non-flush	10 mm	36 mm	12 mm	24 mm	16 mm	64 mm	16 mm

Accessories

Figure	Accessory	Page
	Plug connectors and cables	→ H-267
	Mounting systems	→ H-258
	Further accessories	→ H-280

FLAT RECTANGULAR HOUSINGS FOR USE IN INDUSTRIAL ENVIRONMENTS

C

Product description

When space is tight, the flat design of the IQV sensors are the best choice. Thanks to a low height, they can be easily integrated into applications where space is critical and allow a high degree of freedom when it comes to machine design. Greater sensing ranges of up to 7 mm simplify even the trickiest of detection tasks. Not only the robust metal housing, but also the high tightening torque make flat designs the favorite of installers.

At a glance

- Types: 20 mm x 32 mm x 8 mm or 25 mm x 50 mm x 10 mm
- Extended sensing ranges: 5 mm to 7 mm
- Electrical configuration: DC 3-/4-wire
- Enclosure rating: IP 67
- Temperature range: –25 °C to +70 °C
- Metal housing, plastic sensing face
- Flat housing made of robust metal

Your benefits

- Extremely stable and durable
- For applications with limited space
- No restrictions on machine design
- Flat housing provides a high degree of design freedom
- Reliable mounting with high tightening torque

Additional information

Detailed technical data C-159
Ordering information C-160
Dimensional drawings C-161
Connection diagram. C-162
Installation note C-162
Accessories. C-162

➜ www.sick.com/IQV

For more information, simply enter the link or scan the QR code and get direct access to technical data, CAD design models, operating instructions, software, application examples, and much more.

8014939/2016-08-29
Subject to change without notice

Detailed technical data

Features

	IQ20	IQ25
Housing	Rectangular	
Dimensions (W x H x D)	20 mm x 32 mm x 8 mm	25 mm x 50 mm x 10 mm
Sensing range S_n	7 mm	5 mm
Installation type	Flush	
Switching frequency	150 Hz	500 Hz
Output type	PNP / NPN (depending on type)	PNP
Output function	NO / Complementary (depending on type)	
Electrical wiring	DC 3-wire / DC 4-wire (depending on type)	
Enclosure rating [1]	IP 67	

[1] According to EN 60529.

C

Mechanics/electronics

	IQ20	IQ25
Supply voltage	10 V DC ... 30 V DC	
Ripple [1]	≤ 10 %	≤ 15 %
Voltage drop	< 2.5 V	≤ 2.5 V
Current consumption		
DC 3-wire	15 mA [3]	25 mA [3]
DC 4-wire	15 mA [3]	32 mA [3]
Time delay before availability	≤ 20 ms	≤ 50 ms
Hysteresis	1 % ... 15 %	
Repeatability [4] [5]	± 5 %	
Temperature drift (of S_r)	± 10 %	
EMC	According to EN 60947-5-2	
Continuous current I_a	≤ 200 mA	
Connection type	Cable with male connector, M8, 0.3 m, PUR Cable with male connector, M12, 0.3 m, PUR Cable, 2 m, PUR (depending on type)	Cable, 2 m, PUR
Short-circuit protection	✔	
Reverse polarity protection	✔	
Shock and vibration resistance	30 g, 11 ms / 10 ... 55 Hz, 1 mm	
Ambient operating temperature	–25 °C ... +70 °C	
Housing material	Metal, GD Zn	Metal, GD Al Si 12
Sensing face material	Plastic, PA12	Plastic, PBT

[1] Of V_S.
[2] At I_a max.
[3] Without load.
[4] Ub and Ta constant.
[5] Of Sr.

Reduction factors

Note	The values are reference values which may vary
Stainless steel (V2A, 304)	Approx. 0.7
Aluminum (Al)	Approx. 0.4
Copper (Cu)	Approx. 0.3
Brass (Br)	Approx. 0.4

Ordering information

Other models ➔ www.sick.com/IQV

C

IQ20

- **Housing:** 20 mm x 32 mm x 8 mm

Sensing range S_n	Output function	Output type	Electrical wiring	Connection	Connection diagram	Type	Part no.
7 mm	Complementary	PNP	DC 4-wire	Cable with M12 male connector, 4-pin, 0.3 m, PUR	Cd-006	IQ20-07BPPDQ0S	6042045
	NO	NPN	DC 3-wire	Cable with connector M8, 3-pin, 0.3 m, PUR	Cd-002	IQ20-07BNSDP0S	6042044
		PNP	DC 3-wire		Cd-002	IQ20-07BPSDP0S	6042043
				Cable, 3-wire, 2 m, PUR	Cd-001	IQ20-07BPSDU2S	6045180

IQ25

- **Housing:** 25 mm x 50 mm x 10 mm

Sensing range S_n	Output function	Output type	Electrical wiring	Connection	Connection diagram	Type	Part no.
5 mm	Complementary	PNP	DC 4-wire	Cable, 4-wire, 2 m, PUR	Cd-005	IQ25-05BPPDU2S	6042047
	NO	PNP	DC 3-wire	Cable, 3-wire, 2 m, PUR	Cd-001	IQ25-05BPSDU2S	6042046

Dimensional drawings (Dimensions in mm (inch))

IQ20, cable with M8 male connector, 3-pin

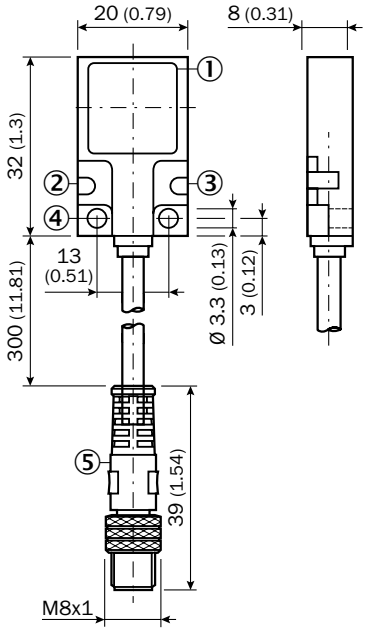

① Sensing face
② Operational status LED, green
③ LED output state, yellow
④ Fixing hole
⑤ Connection

IQ20, cable with M12 male connector, 4-pin

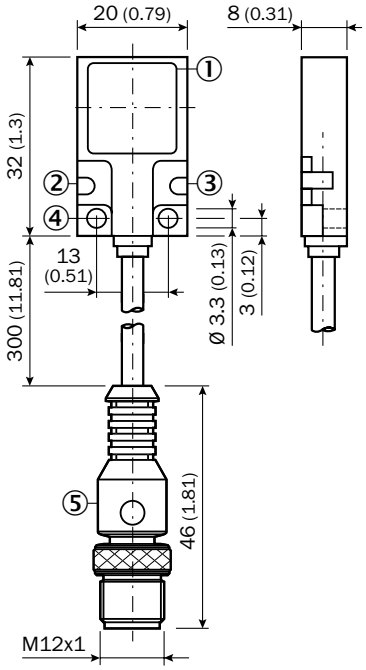

① Sensing face
② Operational status LED, green
③ LED output state, yellow
④ Fixing hole
⑤ Connection

IQ20, cable, 3-pin

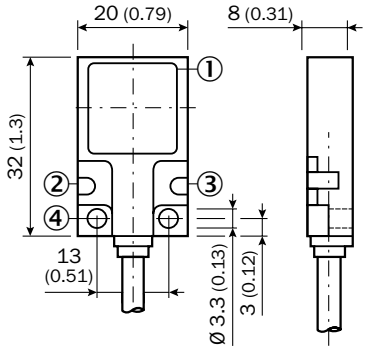

① Sensing face
② Operational status LED, green
③ LED output state, yellow
④ Fixing hole

IQ25

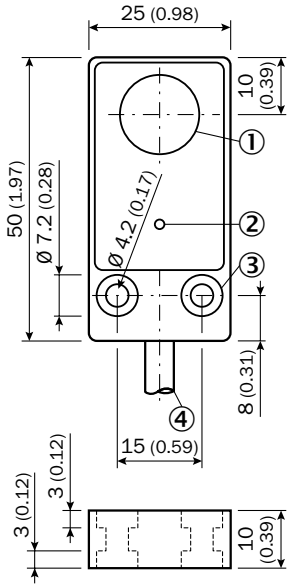

① Sensing face
② Function signal indicator (green)
③ Fixing hole
④ Connection

C

Connection diagram

Cd-001

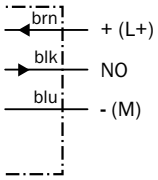

Cd-002

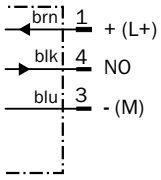

Cd-005

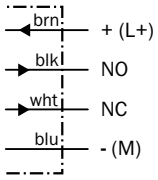

Cd-006

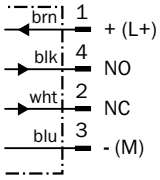

C

Installation note

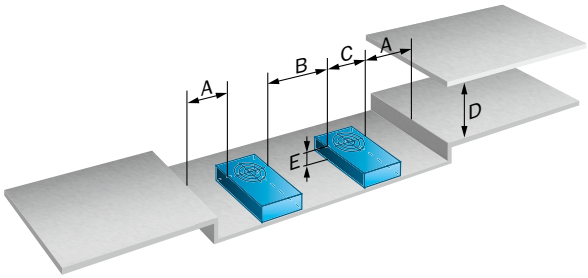

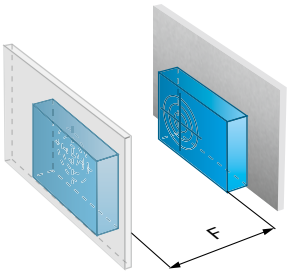

Installation note

	Sensing range Sn	Installation type	A	B	C	D	E	F
IQ20-07Bxxxxxx	7 mm	Flush	0 mm	20 mm	20 mm	21 mm	0 mm	60 mm
IQ25-05Bxxxxxx	5 mm	Flush	0 mm	25 mm	25 mm	15 mm	0 mm	75 mm

Accessories

Figure	Accessory	Page
	Plug connectors and cables	➜ H-267
	Mounting systems	➜ H-258
	Further accessories	➜ H-280

8014939/2016-08-29
Subject to change without notice

C

COMPACT RECTANGULAR HOUSINGS FOR USE IN HARSH AMBIENT CONDITIONS

C

Product description

The IQG sensors can be mounted in a matter of seconds, offer flexible adjustment options, and are easy to monitor. The innovative push-lock system enables mounting without tools in one second flat and makes replacing sensors child's play. Thanks to the rotating sensor head, the IQG sensors can be adapted to suit a whole range of applications. The four corner LEDs enable straightforward sensor status monitoring, whatever the mounting position. A high ambient temperature range, high shock and vibration resistance and good electromagnetic compatibility enable the IQG product family sensors to work continuously and reliably in very harsh environments with strong atmospheric influences.

At a glance

- Type: 40 mm x 40 mm
- Extended sensing ranges: 15 mm to 40 mm
- Electrical configuration: DC 3-/4-wire
- Enclosure rating: IP 68, IP 69K
- Temperature range: –25 °C to +85 °C
- Plastic housing
- Push-lock mounting system
- Sensor head can be rotated in five directions

Your benefits

- Easy to mount in only two seconds without the need for additional tools
- Reliable, cost-effective detection
- The four corner LEDs ensure that the sensor status can be identified from any viewing direction, whatever the mounting position
- Can be easily adapted to numerous applications
- Long sensor service life, even in harsh environments that are subjected to severe weather conditions
- Stable processes thanks to extensive sensing ranges

Additional information

Detailed technical data C-165
Ordering information C-166
Dimensional drawings C-167
Connection diagram. C-168
Response diagram C-168
Installation note C-169
Accessories. C-169

➜ www.sick.com/IQG

For more information, simply enter the link or scan the QR code and get direct access to technical data, CAD design models, operating instructions, software, application examples, and much more.

8014939/2016-08-29
Subject to change without notice

Detailed technical data

Features

	Short-body	Standard design
Housing	Rectangular	
Dimensions (W x H x D)	40 mm x 40 mm x 66 mm	40 mm x 40 mm x 118 mm 40 mm x 40 mm x 132 mm (depending on type)
Sensing range S_n		
Flush	20 mm	
Non-flush	40 mm	
Installation type	Flush / non-flush (depending on type)	
Switching frequency		
Flush	150 Hz	
Non-flush	100 Hz	
Output type	NPN / PNP (depending on type)	
Output function	NO / NC / Complementary (depending on type)	
Electrical wiring	DC 3-wire / DC 4-wire (depending on type)	
Enclosure rating	IP 67, IP 68, IP 69K	

Mechanics/electronics

	Short-body	Standard design
Supply voltage	10 V DC ... 30 V DC	
Ripple [1]	≤ 10 V_{pp}	
Voltage drop	≤ 2 V	
Current consumption	≤ 20 mA	
Time delay before availability	≤ 50 ms / ≤ 200 ms (depending on type)	
Hysteresis [3]	3 % ... 15 %	
Repeatability	≤ 2 % / ≤ 6 % (depending on type)	
Temperature drift (of S_r)	± 10 %	
Continuous current I_a	≤ 200 mA	
Connection type	Male connector, M12	Cable gland / Male connector, M12 (depending on type)
Short-circuit protection	✔	
Reverse polarity protection	✔	
Power-up pulse protection	✔	
Shock and vibration resistance	30 g, 11 ms / 10 ... 55 Hz, 1 mm	
Ambient operating temperature	–25 °C ... +85 °C	
Housing material	Plastic, PA 66	
Sensing face material	Plastic, PA 66	
Tightening torque, max.	1.8 Nm	

[1] Of Ub.
[2] Without load.
[3] Of S_r.

Reduction factors

Note	The values are reference values which may vary
Stainless steel (V2A, 304)	
Flush	Approx. 0.71
Non-flush	Approx. 0.8

C

Aluminum (Al)	
Flush	Approx. 0.3
Non-flush	Approx. 0.34
Copper (Cu)	
Flush	Approx. 0.25
Non-flush	Approx. 0.27
Brass (Br)	
Flush	Approx. 0.36
Non-flush	Approx. 0.38

C

Ordering information

Other models ➜ www.sick.com/IQG

Short-body

- **Connection:** Male connector M12, 4-pin

Sensing range S_n	Installation type	Electrical wiring	Output function	Output type	Connection diagram	Type	Part no.
20 mm	Flush	DC 3-wire	NO	NPN	Cd-011	IQ40-20BNSKC0K	1071846
				PNP	Cd-011	IQ40-20BPSKC0K	1071840
			NC	NPN	Cd-008	IQ40-20BNOKC0K	1071848
				PNP	Cd-008	IQ40-20BPOKC0K	1071844
		DC 4-wire	Complementary	NPN	Cd-009	IQ40-20BNPKC0K	1071560
				PNP	Cd-009	IQ40-20BPPKC0K	1071553
40 mm	Non-flush	DC 3-wire	NO	NPN	Cd-011	IQ40-40NNSKC0K	1071854
				PNP	Cd-011	IQ40-40NPSKC0K	1071850
			NC	NPN	Cd-008	IQ40-40NNOKC0K	1071856
				PNP	Cd-008	IQ40-40NPOKC0K	1071852
		DC 4-wire	Complementary	NPN	Cd-009	IQ40-40NNPKC0K	1071864
				PNP	Cd-009	IQ40-40NPPKC0K	1071552

Standard design

- **Time delay before availability:** ≤ 50 ms
- **Repeatability:** ≤ 2 %

Sensing range S_n	Installation type	Electrical wiring	Output function	Output type	Connection	Connection diagram	Type	Part no.
20 mm	Flush	DC 3-wire	NO	NPN	Cable gland	Cd-342	IQ40-20BNSKK0S	1071847
				PNP	Cable gland	Cd-342	IQ40-20BPSKK0S	1071843
			NC	NPN	Cable gland	Cd-341	IQ40-20BNOKK0S	1071849
				PNP	Cable gland	Cd-341	IQ40-20BPOKK0S	1071845
		DC 4-wire	Complementary	PNP	Male connector M12, 4-pin	Cd-009	IQ40-20BPPKC0S	1071862
				NPN	Cable gland	Cd-030	IQ40-20BNPKK0S	1071861
				PNP	Cable gland	Cd-030	IQ40-20BPPKK0S	1071860

8014939/2016-08-29
Subject to change without notice

Sensing range S_n	Installation type	Electrical wiring	Output function	Output type	Connection	Connection diagram	Type	Part no.
40 mm	Non-flush	DC 3-wire	NO	NPN	Cable gland	Cd-342	IQ40-40NNSKK0S	1071855
				PNP	Cable gland	Cd-342	IQ40-40NPSKK0S	1071851
			NC	NPN	Cable gland	Cd-341	IQ40-40NNOKK0S	1071857
				PNP	Cable gland	Cd-341	IQ40-40NPOKK0S	1071853
		DC 4-wire	Comple-mentary	PNP	Male connector M12, 4-pin	Cd-009	IQ40-40NPPKC0S	1071866
				NPN	Cable gland	Cd-030	IQ40-40NNPKK0S	1071865
				PNP	Cable gland	Cd-030	IQ40-40NPPKK0S	1071863

Dimensional drawings (Dimensions in mm (inch))

C

IQG Short-body housing

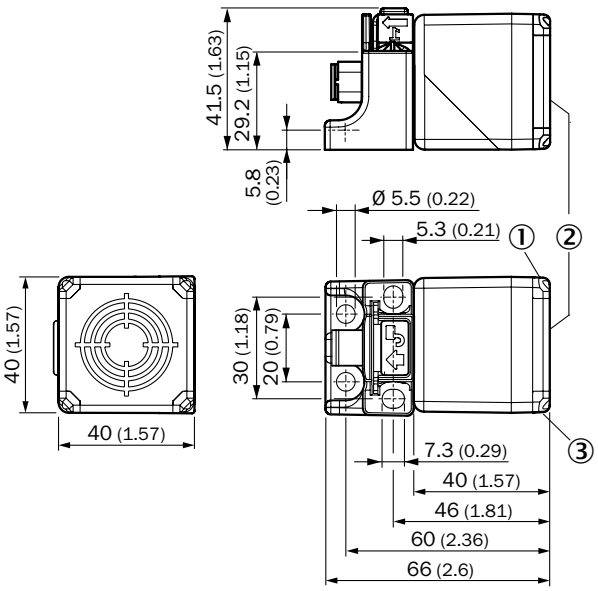

① LED output state, yellow
② Sensing face
③ Operational status LED, green

IQG Standard, cable gland

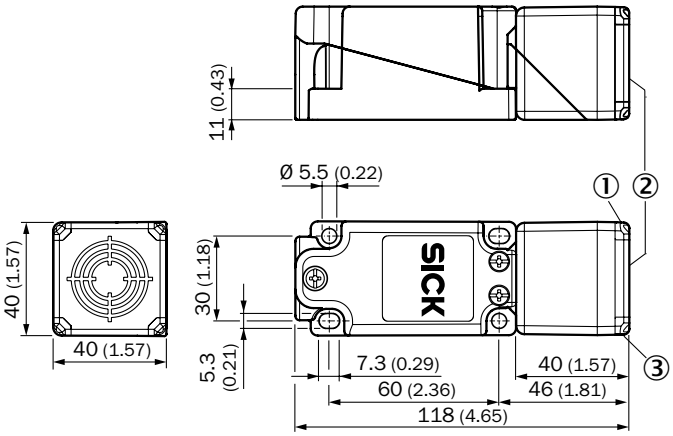

① LED output state, yellow
② Sensing face
③ Operational status LED, green

IQG Standard, connector M12

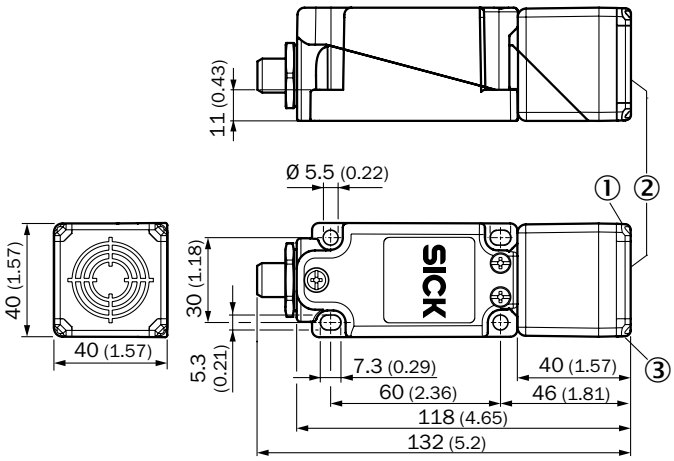

① LED output state, yellow
② Sensing face
③ Operational status LED, green

C

Connection diagram

Cd-008

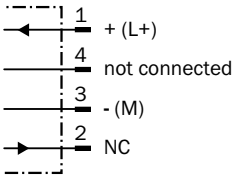

Cd-009

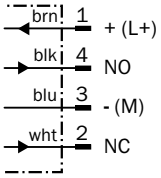

Cd-011

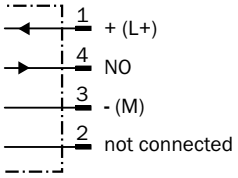

Cd-030

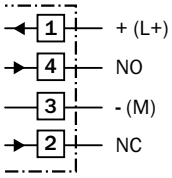

Cd-341

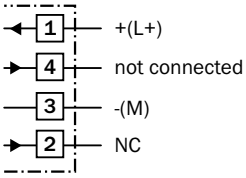

Cd-342

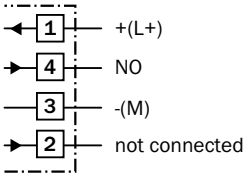

Response diagram

IQ40-20Bxxxxx

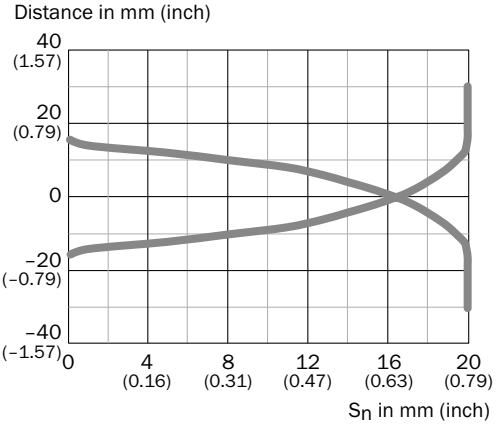

IQ40-40Nxxxxx

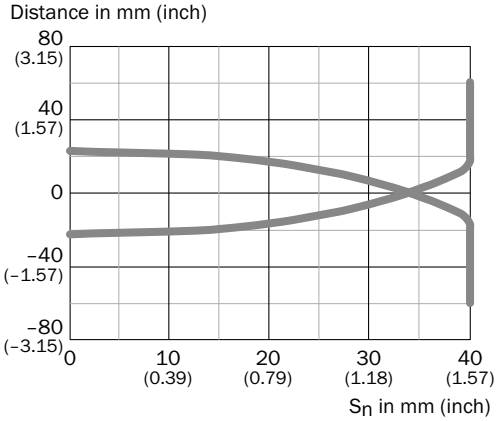

8014939/2016-08-29
Subject to change without notice

Installation note

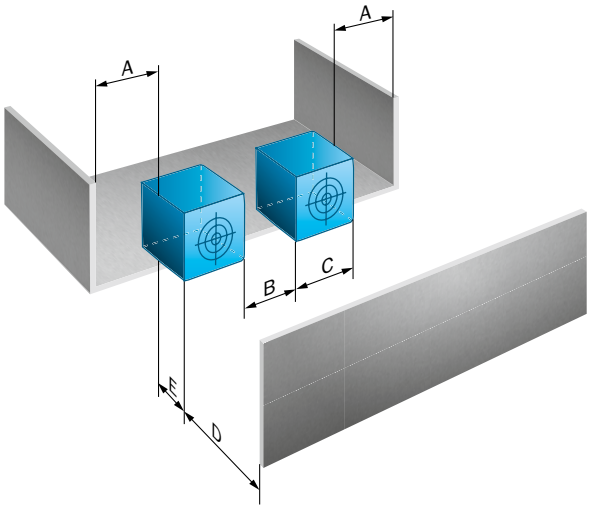

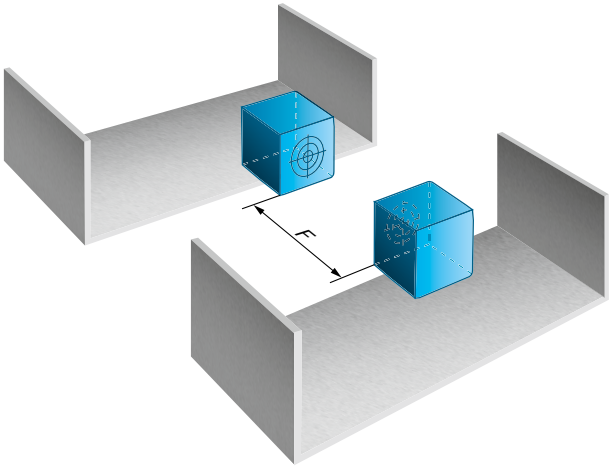

C

Installation note

	Installation	Ssensing range Sn	A	B	C	D	E	F
IQ40-20Bxxxxxx	Flush	20 mm	0 mm	40 mm	40 mm	60 mm	0 mm	70 mm
IQ40-40Nxxxxxx	Non-flush	40 mm	42 mm	100 mm	40 mm	120 mm	40 mm	150 mm

Accessories

Figure	Accessory	Page
	Plug connectors and cables	➜ H-267
	Mounting systems	➜ H-258
	Further accessories	➜ H-280

LARGE RECTANGULAR HOUSINGS FOR USE IN INDUSTRIAL ENVIRONMENTS

C

Product description

With an adjustable sensing range of up to 60 mm, the sensors of the IQL product family offer a high degree of detection ease. Thanks to the freely configurable N/O and N/C output function, they also reduce costs in new and existing applications. Due to installation from above and the extended sensing range, the IQL sensors are optimally suited for recessed floor mounting, as is often found in the automotive industry or storage and conveyor technology. The IQL is also the number one choice when it comes to other applications.

At a glance

- Type: 80 mm x 80 mm
- Longer sensing ranges: 50 mm to 60 mm
- Electrical configuration: DC 3-/4-wire, or AC/DC 2-wire
- Enclosure rating IP 65 or IP 67
- Temperature range: –25 °C to +80 °C
- Plastic housing
- Programmable N/O or N/C function
- Sensing range setting via potentiometer

Your benefits

- Increase in machine availability
- Reduced mechanical damage
- Longer service life for reduced costs
- Quick and safe installation

Additional information

Detailed technical data C-171
Ordering information C-172
Dimensional drawings C-172
Connection diagram C-173
Installation note C-174
Accessories C-174

➜ www.sick.com/IQL

For more information, simply enter the link or scan the QR code and get direct access to technical data, CAD design models, operating instructions, software, application examples, and much more.

8014939/2016-08-29
Subject to change without notice

Detailed technical data

Features

	DC 3-wire	DC 4-wire	AC/DC 2-wire
Housing	Rectangular		
Dimensions (W x H x D)	80 mm x 40 mm x 105 mm	80 mm x 40 mm x 112 mm	80 mm x 40 mm x 105 mm
Sensing range S_n			
Non-flush	60 mm	–	60 mm
Flush, non-flush, overflush	–	50 mm	–
Installation type	Non-flush	Flush / non-flush / overflush	Non-flush
Switching frequency	100 Hz	70 Hz	4 Hz
Output type	PNP		PNP / NPN
Output function	NC or NO	Complementary	NC or NO
Output characteristic	Wire configurable	–	Wire configurable
Electrical wiring	DC 3-wire	DC 4-wire	AC/DC 2-wire
Enclosure rating [1]	IP 65	IP 67	IP 65

[1] According to EN 60529.

C

Mechanics/electronics

	DC 3-wire	DC 4-wire	AC/DC 2-wire
Supply voltage	10 V DC ... 36 V DC		20 V AC/DC ... 250 V AC/DC
Voltage drop	≤ 2.5 V [1]		≤ 6.5 V (AC)
Current consumption [2]	≤ 15 mA	≤ 20 mA	–
Hysteresis	1 % ... 15 %	3 % ... 20 %	1 % ... 15 %
Temperature drift (of S_r)	± 10 %	± 15 %	± 10 %
EMC	According to EN 60947-5-2		
Continuous current I_a	≤ 250 mA		≤ 350 mA [3]
Off-state current	≤ 0.5 mA	–	≤ 2.5 mA (AC 250 V)
Minimum load current	–		> 5 mA
Short-time withstand current	–		2.2 A [4]
Connection type	Cable gland, M20	Male connector, M12	Cable gland, M20
Cable gland clamping area	M20 x 1.5	–	M20 x 1.5
Short-circuit protection	✔		– [5]
Reverse polarity protection	✔		–
Power-up pulse protection	✔	–	
Shock and vibration resistance	30 g, 11 ms / 10 ... 55 Hz, 1 mm		
Ambient operating temperature	–25 °C ... +80 °C	–25 °C ... +70 °C	–25 °C ... +80 °C
Housing material	Plastic, PPE	Metal, Zinc diecast	Plastic, PPE
Sensing face material	Plastic, PPE		

[1] With Ia max and Ub 24 V.
[2] Without load.
[3] AC (+50 °C)
[4] 20 ms / 0.5 Hz.
[5] Miniature fuse to IEC 60217-2 Sheet 1, ≤ 2 A (quick-blow)

Reduction factors

	DC 3-wire	DC 4-wire	AC/DC 2-wire
Note	The values are reference values which may vary		
Stainless steel (V2A, 304)	Approx. 0.7	Approx. 0.85	Approx. 0.7
Aluminum (Al)	Approx. 0.3	Approx. 0.46	Approx. 0.3
Copper (Cu)	Approx. 0.2	Approx. 0.38	Approx. 0.2
Brass (Br)	Approx. 0.4	Approx. 0.48	Approx. 0.4

Ordering information

Other models ➜ www.sick.com/IQL

C

IQ80 DC 3-wire

Sensing range S_n	Output function	Output type	Connection	Connection diagram	Type	Part no.
60 mm	NC or NO	PNP	Terminal connection with M20 gland	Cd-024	IQ80-60NPP-KK0	7900227

IQ80 DC 4-wire

Sensing range S_n	Output function	Output type	Connection	Connection diagram	Type	Part no.
50 mm	Complementary	PNP	Male connector M12, 4-pin	Cd-009	IQ80-50BPP-KC0	6026473

IQ80 AC/DC 2-wire

Sensing range S_n	Output function	Output type	Connection	Connection diagram	Type	Part no.
60 mm	NC or NO	PNP, NPN	Terminal connection with M20 gland	Cd-025	IQ80-60NUP-KK0	7902138

Dimensional drawings (Dimensions in mm (inch))

IQ80, DC 3-wire, AC/DC 2-wire

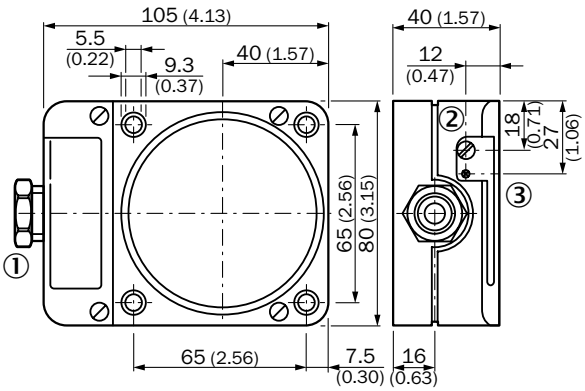

① Connection
② Potentiometer
③ Indication LED

8014939/2016-08-29
Subject to change without notice

IQ80, DC 4-wire

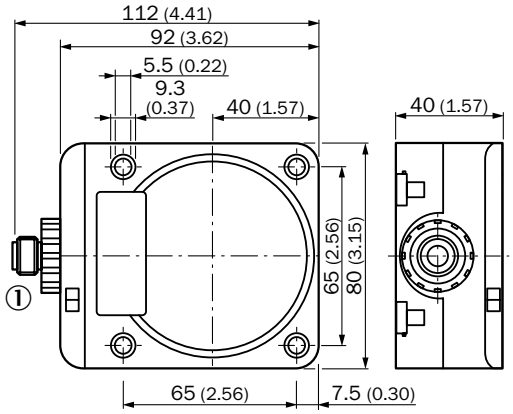

① Connection

Connection diagram

Cd-009

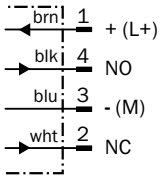

Cd-024

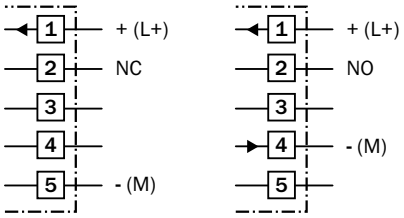

Cd-025

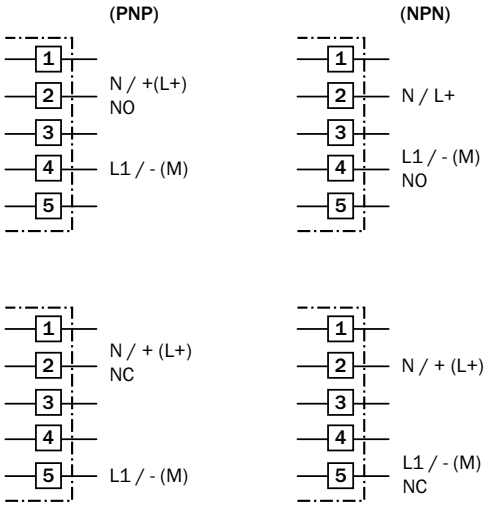

C

Installation note

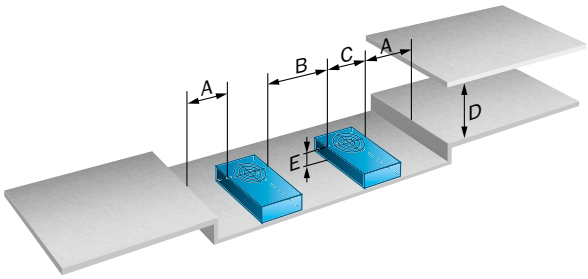

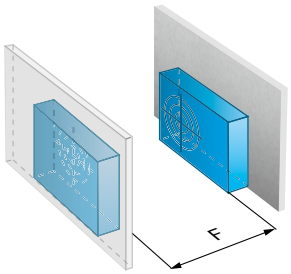

	Sensing range Sn	Installation type	A	B	C	D	E	F
IQ80-xxBxx-xxx	60 mm	Flush	0 mm	80 mm	80 mm	150 mm	0 mm	400 mm
IQ80-xxNxx-xxx	60 mm	Non-flush	160 mm	160 mm	80 mm	120 mm	40 mm	480 mm

C

Accessories

Figure	Accessory	Page
	Plug connectors and cables	➜ H-267
	Mounting systems	➜ H-258
	Further accessories	➜ H-280

C

D

INDUCTIVE SAFETY SWITCHES

Safe, non-contact position monitoring

Inductive safety switches are used for determining position and work on a non-contact basis. They detect approaching objects without a separate actuator. Their wide response range makes them simple to mount and adjust.

Your benefits

- Long service life due to durable and low-maintenance design
- Just one safety switch in conjunction with a suitable safety module makes it possible to solve applications up to PL e and Cat. 4 (EN ISO 13849)
- The devices are easy to clean, making them suitable for contaminated areas or environments with strict hygiene standard
- Fast diagnostics via LED status indicator
- Flexi Loop now enables a safe series connection with enhanced diagnostics capabilities and minimal wiring effort.

D

Selection guide D-178
Product family overview D-180
Technology I-284

IN3000 Direct. D-182

IN4000 Direct. D-188

IN4000 Standard D-192

OVERVIEW OF INDUCTIVE SAFETY SWITCHES

D

Product			Housing													
			Design		Size				Material			Enclosure rating			Mounting type	
			Cylindrical thread design	Rectangular	M12	M18	M30	40 mm x 40 mm x 66 mm	Brass	Zinc die cast	Stainless steel	IP 65	IP 67	IP 69K	Flush	Non-flush
Inductive safety switches																
	IN3000 Direct	IN30_E0208K	■				■				■	■	■			■
		IN30_E0305K	■			■					■	■	■			■
		IN30_E0306K	■			■			■			■	■		■	
		IN30_E0407K	■		■						■	■	■			■
	IN4000 Direct	IN40-E0101K		■				■		■			■			■
		IN40-E0109K		■				■		■			■			■
	IN4000 Standard	IN40-DO101K		■				■		■			■			■
		IN40-DO202K	■				■				■			■		■
		IN40-DO303K	■			■					■			■		■
		IN40-DO304K	■			■			■					■	■	

8014939/2016-08-29
Subject to change without notice

Sensor properties					Sensing range S_n		Page
Performance level (EN ISO 13849)		Number of safe outputs			Enable zone	Safe switch off distance S_{ar}	
d	e	1	2	Flexi-Loop-ready	5 10 15 20	5 10 15 20 25 30 35 40 45	
■			■	■	1 mm ... 15 mm	22 mm	→ D-182
■			■	■	1 mm ... 8 mm	12 mm	→ D-182
■			■	■	1 mm ... 5 mm	7 mm	→ D-182
■			■	■	0.5 mm ... 4 mm	6 mm	→ D-182
	■		■	■	10 mm ... 15 mm	30 mm	→ D-188
	■		■	■	4 mm ... 20 mm	45 mm	→ D-188
	■	■			10 mm ... 15 mm	30 mm	→ D-192
	■	■			6 mm ... 12 mm	30 mm	→ D-192
	■	■			3 mm ... 6 mm	15 mm	→ D-192
	■	■			1 mm ... 4 mm	10 mm	→ D-192

D

PRODUCT FAMILY OVERVIEW

IN3000 Direct

Safe, non-contact position monitoring

Technical data overview	
Sensor principle	Inductive
Safety integrity level	SIL2 (IEC 61508), SILCL2 (EN 62061)
Category	Applicable up to category 3 (EN ISO 13849)
Performance level	PL d (EN ISO 13849)
Type of output	Semiconductor
Number of safe outputs	2
Connection type	Plug connector, M12, 4-pin
Flexi-Loop-ready	✔

At a glance

- Response range of up to 15 mm
- LED status indicator
- Up to performance level PL d (EN ISO 13849), SILCL2 (EN 62061), SIL2 (IEC 61508)
- Flexi Loop-compatible M12 plug connector

Detailed information ➜ D-182

D

	IN4000 Direct	**IN4000 Standard**
	Safe, non-contact position monitoring	Safe, non-contact position monitoring
	Inductive	Inductive
	SIL3 (IEC 61508), SILCL3 (EN 62061)	SIL3 (IEC 61508)
	Category 4 (EN ISO 13849)	Category 4 (EN ISO 13849)
	PL e (EN ISO 13849)	PL e (EN ISO 13849)
	Semiconductor (OSSD)	Semiconductor, pulsed
	2	1
	Plug connector, M12, 4-pin	Plug connector, M12, 4-pin
	✔	–
	• Two OSSD safety outputs for direct connection of sensors to a single safety controller • Response range of up to 20 mm • LED status indicator • Up to performance level PL e / Cat. 4 (EN ISO 13849) • Flexi Loop-compatible M12 plug connector	• One clocked safety output for direct connection of sensors to a safety controller • IP67 or IP69K enclosure rating • Response range up to 15 mm • LED status indicator • Up to performance level PL e (EN ISO 13849) • Safe series connection of sensors possible
	➜ D-188	➜ D-192

D

SAFE, NON-CONTACT POSITION MONITORING

Functional Safety

D

Product description

The IN3000 Direct inductive safety switches are used for determining position and work on a non-contact basis. These safety switches are actuated through metal (e.g., ST37 steel) so that no separate actuator is required. The IN3000 Direct can be connected via two outputs directly to a suitable electronic evaluation system, such as a safe control solution. Their non-contact operating principle enables simple adjustment and mounting as well as providing increased shock and vibration resistance.

At a glance

- Response range of up to 15 mm
- LED status indicator
- Up to performance level PL d (EN ISO 13849), SILCL2 (EN 62061), SIL2 (IEC 61508)
- Flexi Loop-compatible M12 plug connector

Your benefits

- Cost-effective solution for applications up to PL d / SILCL2
- Space-saving mounting due to compact housing design
- Fast diagnostics via LED status indicator
- Long service life due to durable and low-maintenance design
- The devices are easy to clean, making them suitable for contaminated areas or environments with strict hygiene standards
- Flexi Loop now enables a safe series connection with enhanced diagnostics capabilities and minimal wiring effort.

Additional information

Detailed technical data D-183
Ordering information D-184
Dimensional drawings D-184
Connection diagram. D-184
Response range D-185
Recommended accessories . . . D-186
Enhanced system solutions. . . . D-186

→ www.sick.com/IN3000_Direct

For more information, simply enter the link or scan the QR code and get direct access to technical data, CAD design models, operating instructions, software, application examples, and much more.

8014939/2016-08-29
Subject to change without notice

Detailed technical data

You can find more detailed data in the operating instructions. Download -> www.sick.com/OI

Features

	IN30-E0208K	IN30-E0305K	IN30-E0306K	IN30-E0407K
Sensor principle	Inductive			
Number of safe outputs	2			
Enable zone	1 mm ... 15 mm [1]	1 mm ... 8 mm [1]	1 mm ... 5 mm [1]	0.5 mm ... 4 mm [1]
Safe switch off distance S_{ar}	22 mm	12 mm	7 mm	6 mm

[1] Values apply for steel (FE360)

Safety-related parameters

Safety integrity level	SIL2 (IEC 61508), SILCL2 (EN 62061)
Category	Applicable up to category 3 (EN ISO 13849)
Performance level	PL d (EN ISO 13849)
PFH_D (mean probability of a dangerous failure per hour)	1.0 x 10^{-7} (EN ISO 13849)
T_M (mission time)	10 years (EN ISO 13849) [1] 20 years (EN ISO 13849) [2]
Type	Type 3 (EN ISO 14119)
Actuator coding level	Uncoded (EN ISO 14119)

[1] At –25 °C ... +70 °C and 5 % ... 95 % relative air humidity.
[2] At +10 °C ... +40 °C and 5 % ... 70 % relative air humidity.

Interfaces

Connection type	Plug connector, M12, 4-pin
Flexi-Loop-ready	✔
Power indication	✔
Status display	✔

Electrical data

Protection class	III (EN 50178)
Supply voltage V_s	24 V DC (19.2 V DC ... 28.8 V DC)
Type of output	Semiconductor
Response time	≤ 1 ms

Mechanical data

	IN30-E0208K	IN30-E0305K	IN30-E0306K	IN30-E0407K
Design	Cylindrical			
Housing diameter	M30	M18		M12
Weight	0.19 kg	0.1 kg	0.11 kg	0.08 kg
Housing material	V4A (housing), PBT (cover)		White bronze coated brass (housing), PBT (cover)	V4A (housing), PBT (cover)
Installation type	Non-flush		Flush	Non-flush

Ambient data

Enclosure rating	IP 65, IP 67 (IEC 60529)
Ambient operating temperature	–25 °C ... +70 °C
Storage temperature	–25 °C ... +70 °C

D

Ordering information

Design	Housing diameter	Installation type	Enable zone	Type	Part no.
Cylindrical	M30	Non-flush	≤ 15 mm	IN30-E0208K	6044655
	M18	Non-flush	≤ 8 mm	IN30-E0305K	6034576
		Flush	≤ 5 mm	IN30-E0306K	6034581
	M12	Non-flush	≤ 4 mm	IN30-E0407K	6034582

Dimensional drawings (Dimensions in mm (inch))

IN30-E0208K

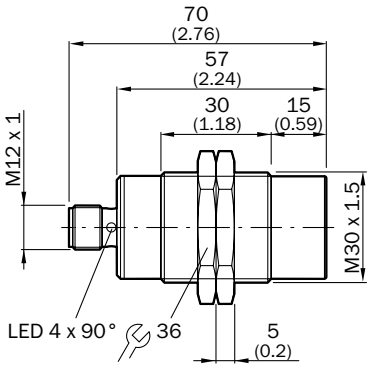

IN30-E0305K

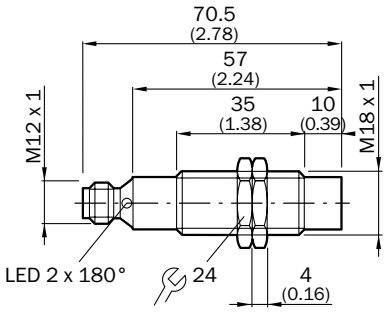

IN30-E0306K

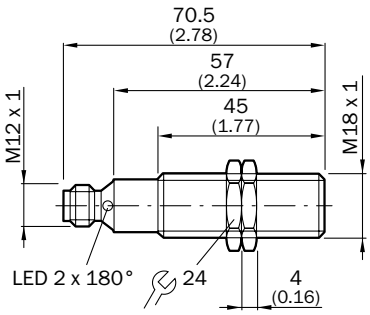

IN30-E0407K

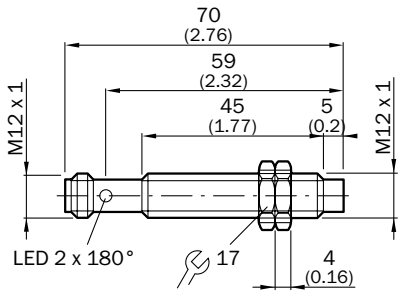

Connection diagram

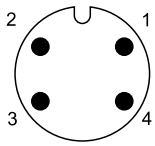

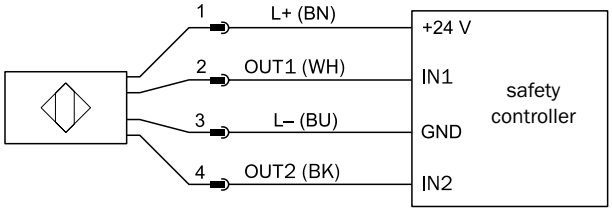

Response range

IN30-E0208K

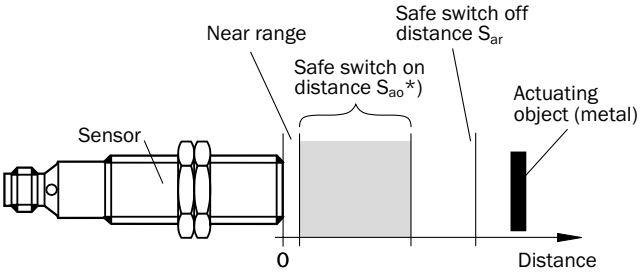

Material of the actuating object	Safe switch on distance S_{ao}*)	Safe switch off distance S_{ar}
Steel FE360	1.0 mm ... 15.0 mm	22 mm
Stainless steel 1.4302	0 mm ... 11.4 mm	
AlMg 3G22	0 mm ... 6.8 mm	
CuZn 37	0 mm ... 7.2 mm	
Cu	0 mm ... 5.5 mm	

*) Typical values for damping with a reference target plate of 45 x 45 x 1 mm and non-flush installation according to IEC 60947-5-2 at an ambient temperature of 20 °C.

IN30-E0305K

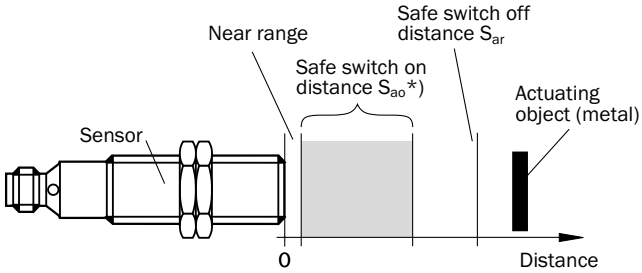

Material of the actuating object	Safe switch on distance S_{ao}*)	Safe switch off distance S_{ar}
Steel FE360	1.0 mm ... 8.0 mm	12 mm
Stainless steel 1.4302	0.5 mm ... 5.6 mm	
AlMg 3G22	0 mm ... 3.2 mm	
CuZn 37	0 mm ... 3.2 mm	
Cu	0 mm ... 2.4 mm	

*) Typical values for damping with a reference target plate of 24 x 24 x 1 mm and non-flush installation according to IEC 60947-5-2 at an ambient temperature of 20 °C.

D

IN30-E0306K

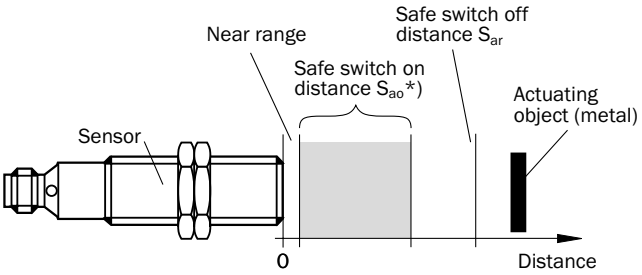

Material of the actuating object	Safe switch on distance S_{ao}*)	Safe switch off distance S_{ar}
Steel FE360	1.0 mm ... 5.0 mm	7 mm
Stainless steel 1.4302	0.5 mm ... 3.5 mm	
AlMg 3G22	0 mm ... 2.0 mm	
CuZn 37	0 mm ... 2.0 mm	
Cu	0 mm ... 1.5 mm	

*) Typical values for damping with a reference target plate of 18 x 18 x 1 mm and non-flush installation according to IEC 60947-5-2 at an ambient temperature of 20 °C.

IN30-E0407K

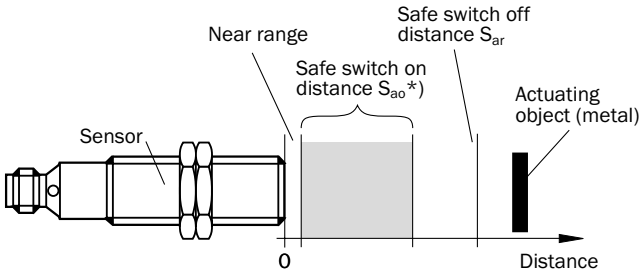

Material of the actuating object	Safe switch on distance S_{ao}*)	Safe switch off distance S_{ar}
Steel FE360	0.5 mm ... 4 mm	6 mm
Stainless steel 1.4302	0 mm ... 3.1 mm	
AlMg 3G22	0 mm ... 1.8 mm	
CuZn 37	0 mm ... 2.0 mm	
Cu	0 mm ... 1.2 mm	

*) Typical values for damping with a reference target plate of 12 x 12 x 1 mm and non-flush installation according to IEC 60947-5-2 at an ambient temperature of 20 °C.

Recommended accessories

Figure	Accessory	Page
	Plug connectors and cables	➜ H-267
	Mounting systems	➜ H-258
	Further accessories	➜ H-280

Enhanced system solutions

Figure	Description	Further information
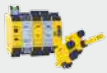	Intelligent machine designs focus on increasing productivity while also ensuring the highest level of quality and safety. sens:Control – safe control solutions from SICK satisfy these criteria.	➜ www.sick.com/Flexi_Soft

D

D

SAFE, NON-CONTACT POSITION MONITORING

D

Functional Safety

Product description

The IN4000 Direct inductive safety switches are used for determining position and work on a non-contact basis. These safety switches are actuated through metal (e.g., ST37 steel) so that no separate actuator is required. The IN4000 Direct has two safety outputs (OSSD) and can be connected directly to a suitable safety-enhanced electronic evaluation system, such as a safe control solution. Their non-contact operating principle enables simple adjustment and mounting as well as providing increased shock and vibration resistance.

At a glance

- Two OSSD safety outputs for direct connection of sensors to a single safety controller
- Response range of up to 20 mm
- LED status indicator
- Up to performance level PL e / Cat. 4 (EN ISO 13849)
- Flexi Loop-compatible M12 plug connector

Your benefits

- Direct connection to the safe control solution eliminates any additional wiring and reduces installation time
- Fast diagnostics via LED status indicator
- Long service life due to durable and low-maintenance design
- Just one safety switch in conjunction with a suitable safety module makes it possible to solve applications up to PL e and Cat. 4 (EN ISO 13849)
- The devices are easy to clean, making them suitable for contaminated areas or environments with strict hygiene standards
- Flexi Loop now enables a safe series connection with enhanced diagnostics capabilities and minimal wiring effort.

Additional information

Detailed technical data D-189
Ordering information D-190
Dimensional drawing D-190
Connection diagram. D-190
Response range D-191
Recommended accessories D-191
Enhanced system solutions. D-191

➜ www.sick.com/IN4000_Direct

For more information, simply enter the link or scan the QR code and get direct access to technical data, CAD design models, operating instructions, software, application examples, and much more.

8014939/2016-08-29
Subject to change without notice

Detailed technical data

You can find more detailed data in the operating instructions. Download -> www.sick.com/OI

Features

	IN40-E0101K	IN40-E0109K
Sensor principle	Inductive	
Number of safe outputs	2	
Switching delay from state change	Max. 50 ms [1]	
Enable zone	10 mm ... 15 mm [2]	4 mm ... 20 mm [2]
Safe switch off distance S_{ar}	30 mm [2]	45 mm [2]
Monitoring time minimum dwell time	≥ 0.2 s	

[1] During this time the output is switched off (Logical "0"), see response range.
[2] Dependent on material. The indicated values refer to steel ST37.

Safety-related parameters

Safety integrity level	SIL3 (IEC 61508), SILCL3 (EN 62061)
Category	Category 4 (EN ISO 13849)
Performance level	PL e (EN ISO 13849)
PFH_D (mean probability of a dangerous failure per hour)	2.5 x 10^{-9} (EN ISO 13849)
T_M (mission time)	10 years (EN ISO 13849) [1] 20 years (EN ISO 13849) [2]
Type	Type 3 (EN ISO 14119)
Actuator coding level	Uncoded (EN ISO 14119)
Classification in compliance with IEC/ EN 60947-5-3	PDF-M

[1] At –25 °C ... +70 °C and 5 % ... 95 % relative air humidity.
[2] At +10 °C ... +40 °C and 5 % ... 70 % relative air humidity.

Interfaces

Connection type	Plug connector, M12, 4-pin
Flexi-Loop-ready	✔
Power indication	✔
Status display	✔

Electrical data

	IN40-E0101K	IN40-E0109K
Protection class	III (EN 50178)	
Supply voltage V_s	24 V DC (19.2 V DC ... 30 V DC)	
Power consumption	15 mA	30 mA
Type of output	Semiconductor (OSSD)	

Mechanical data

Design	Rectangular
Dimensions	40 mm x 40 mm x 66 mm
Weight	0.22 kg
Housing material	Zinc die cast (housing), PPE (cover)
Installation type	Non-flush

D

Ambient data

	IN40-E0101K	IN40-E0109K
Enclosure rating	IP 67 (IEC 60529)	
Ambient operating temperature	–25 °C ... +70 °C	–25 °C ... +60 °C
Storage temperature	–25 °C ... +70 °C	
Vibration resistance	10 Hz ... 55 Hz, 1 mm (EN 60947-5-3)	
Shock resistance	30 g, 11 ms (EN 60947-5-3)	

Ordering information

Design	Installation type	Enable zone	Type	Part no.
Rectangular	Non-flush	≤ 15 mm	IN40-E0101K	6027388
		≤ 20 mm	IN40-E0109K	6050281

Dimensional drawing (Dimensions in mm (inch))

D

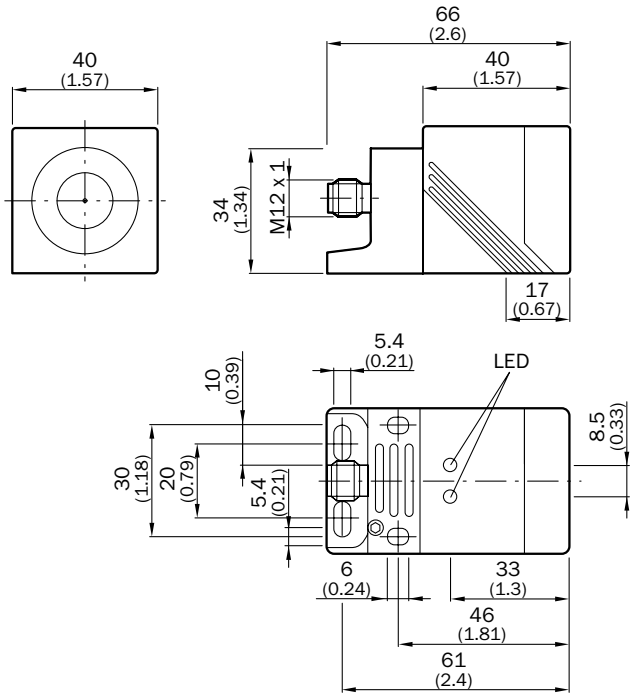

Connection diagram

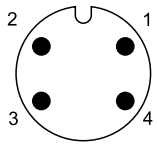

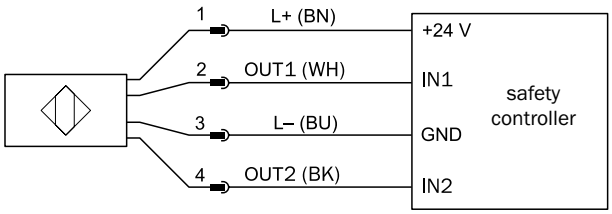

Response range

IN40-E0101K

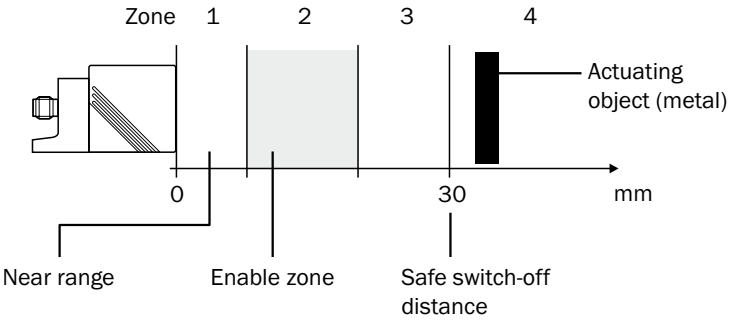

IN40-E0109K

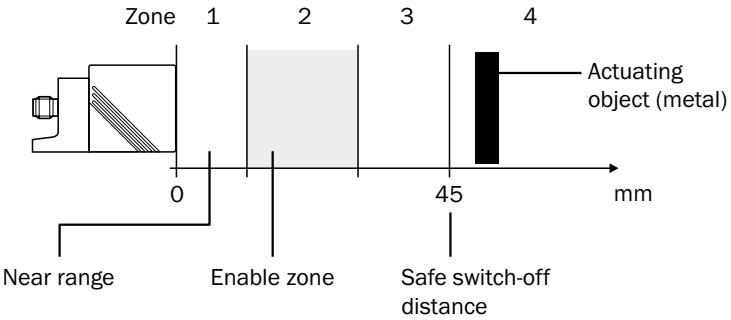

Recommended accessories

Figure	Accessory	Page
	Plug connectors and cables	➜ H-267
	Mounting systems	➜ H-258
	Further accessories	➜ H-280

Enhanced system solutions

Figure	Description	Further information
	Intelligent machine designs focus on increasing productivity while also ensuring the highest level of quality and safety. sens:Control – safe control solutions from SICK satisfy these criteria.	➜ www.sick.com/Flexi_Soft

For **further accessories**, see ➜

D

SAFE, NON-CONTACT POSITION MONITORING

D

Functional Safety

Product description

The IN4000 Standard inductive safety switches are used for determining position and work on a non-contact basis. These safety switches are actuated through metal (e.g., ST37 steel) so that no separate actuator is required. It has a single-channel operating principle: a pulsed input signal is converted to a pulsed output signal and evaluated by the connected safety controller. The response time of the sensors is monitored spatially and chronologically, enabling better prevention against tampering and a high level of safety protection. Their non-contact operating principle enables simple adjustment and mounting as well as providing increased shock and vibration resistance.

At a glance

- One clocked safety output for direct connection of sensors to a safety controller
- IP67 or IP69K enclosure rating
- Response range up to 15 mm
- LED status indicator
- Up to performance level PL e (EN ISO 13849)
- Safe series connection of sensors possible

Your benefits

- Fast diagnostics via LED status indicator
- Cascadability of up to 9 sensors saves costs
- Long service life due to durable and low-maintenance design
- Just one safety switch in conjunction with a suitable safety module makes it possible to solve applications up to PL e and Cat. 4 (EN ISO 13849)
- The devices are easy to clean, making them suitable for contaminated areas or environments with strict hygiene standards

Additional information

Detailed technical data D-193
Ordering information D-194
Dimensional drawings D-194
Connection diagram..... D-195
Response range D-195
Recommended accessories ... D-196

→ www.sick.com/IN4000_Standard

For more information, simply enter the link or scan the QR code and get direct access to technical data, CAD design models, operating instructions, software, application examples, and much more.

8014939/2016-08-29
Subject to change without notice

Detailed technical data

You can find more detailed data in the operating instructions. Download -> www.sick.com/OI

Features

	IN40-D0101K	IN40-D0202K	IN40-D0303K	IN40-D0304K
Sensor principle	Inductive			
Number of safe outputs	1			
Switching delay from state change	T2 + 20 ms [1]			
Enable zone	10 mm ... 15 mm [2]	6 mm ... 12 mm [2]	3 mm ... 6 mm [2]	1 mm ... 4 mm [2]
Safe switch off distance S_{ar}	30 mm [2]		15 mm [2]	10 mm [2]
Monitoring time minimum dwell time	≥ 0.2 s			

[1] During this time the output is switched off (Logical "0"), see response range.
[2] Dependent on material. The indicated values refer to steel ST37.

Safety-related parameters

Safety integrity level	SIL3 (IEC 61508)
Category	Category 4 (EN ISO 13849)
Performance level	PL e (EN ISO 13849)
PFH_D (mean probability of a dangerous failure per hour)	1.33 x 10^{-9} (EN ISO 13849)
T_M (mission time)	10 years (EN ISO 13849) [1] 20 years (EN ISO 13849) [2]
Type	Type 3 (EN ISO 14119)
Actuator coding level	Uncoded (EN ISO 14119)
Classification in compliance with IEC/ EN 60947-5-3	PDF-M

[1] At –25 °C ... +70 °C and 5 % ... 95 % relative air humidity.
[2] At +10 °C ... +40 °C and 5 % ... 70 % relative air humidity.

Functions

Cascading	✔

Interfaces

Connection type	Plug connector, M12, 4-pin
Power indication	✔
Status display	✔

Electrical data

Protection class	III (EN 50178)
Supply voltage V_s	24 V DC (19.2 V DC ... 30 V DC)
Power consumption	15 mA
Type of output	Semiconductor, pulsed

Mechanical data

	IN40-D0101K	IN40-D0202K	IN40-D0303K	IN40-D0304K
Design	Rectangular	Cylindrical		
Dimensions	40 mm x 40 mm x 66 mm	–		
Housing diameter	–	M30	M18	
Weight	0.22 kg	0.13 kg	0.06 kg	

D

	IN40-D0101K	IN40-D0202K	IN40-D0303K	IN40-D0304K
Housing material	Zinc die cast (housing), PPE (cover)	V4A (housing), PEEK (Cover)	V4A (housing), PBT (cover)	Specially coated brass (housing), PBT (cover)
Installation type	Non-flush			Flush

Ambient data

	IN40-D0101K	IN40-D0202K	IN40-D0303K	IN40-D0304K
Enclosure rating	IP 67 (IEC 60529)	IP 69K (IEC 60529)		
Ambient operating temperature	–25 °C ... +70 °C	0 °C ... +70 °C	–25 °C ... +70 °C	
Storage temperature	–25 °C ... +70 °C			
Vibration resistance	10 Hz ... 55 Hz, 1 mm (EN 60947-5-3)			
Shock resistance	30 g, 11 ms (EN 60947-5-3)			

Ordering information

Design	Housing diameter	Installation type	Enable zone	Type	Part no.
Rectangular	–	Non-flush	≤ 15 mm	IN40-D0101K	6027389
Cylindrical	M30	Non-flush	≤ 12 mm	IN40-D0202K	6027392
	M18	Non-flush	≤ 6 mm	IN40-D0303K	6027391
		Flush	≤ 4 mm	IN40-D0304K	6037684

D

Dimensional drawings (Dimensions in mm (inch))

IN40-D0101K

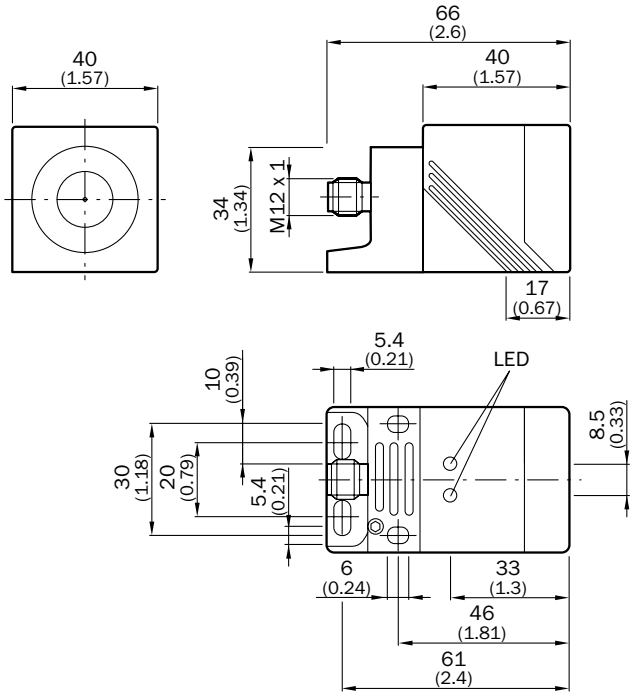

IN40-D0202K

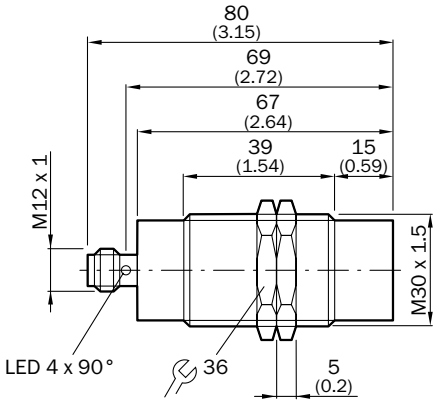

8014939/2016-08-29
Subject to change without notice

IN40-D0303K

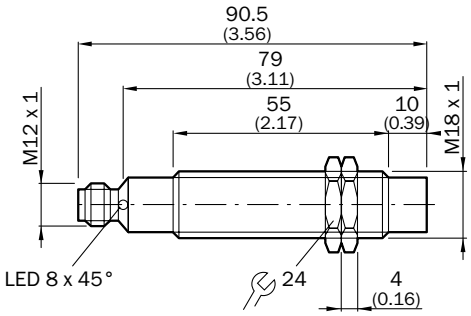

IN40-D0304K

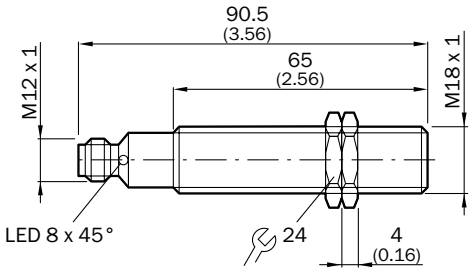

Connection diagram

Sensor connections

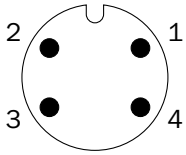

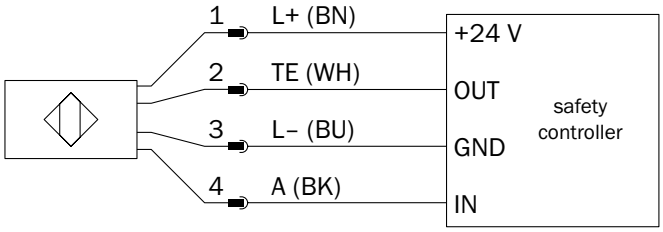

Sensor timing

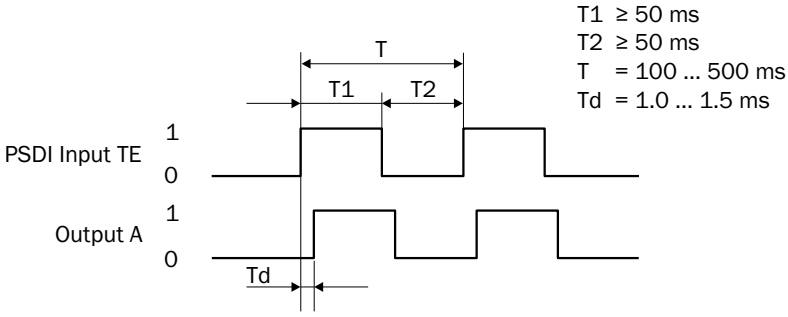

Response range

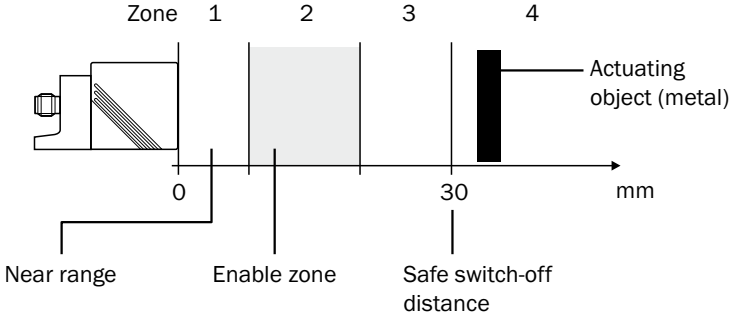

D

Recommended accessories

Figure	Accessory	Page
	Plug connectors and cables	➜ H-267
	Mounting systems	➜ H-258
	Further accessories	➜ H-280

D

8014939/2016-08-29
Subject to change without notice

D

CAPACITIVE PROXIMITY SENSORS

E

Detection of metallic and non-metallic objects

Sometimes you need to know what is hidden beneath a surface. Behind a wall, for example, inside a storage container, inside a shipping container, or behind a cover. Capacitive proximity sensors are ideal for level and feed monitoring. From solid material, such as paper or wood, to granules or liquids, they can be relied upon to detect what is happening in the production process and during final inspection. Is there something behind that cover? Is the finished package really full? How much paint is still left in the tank? For capacitive proximity sensors, these are easy questions to answer. SICKs capacitive proximity sensors are never far from the action. Sensing ranges between 1 and 25 mm allow them to be used in nearly all installation situations, making them extremely adaptable for a wide range of applications. These sensors are also remarkably resistant to interference. Impurities, contamination, dust, and airborne spray particles have little effect on them, nor does electromagnetic interference. No wonder they are installed in a wide range of industries, such as food and automotive, or in storage and conveyor systems.

8014939/2016-08-29
Subject to change without notice

Augmented reality E-200
Selection guide E-202
Product family overview E-204
Technology I-284

CM E-206
Tried-and-tested sensors for object detection and fill level detection

CM PTFE E-214
Sensors in cylindrical PTFE-housing that withstand tough environments

CQ E-218
Reliable capacitive proximity sensors enclosed in a rectangular housing

E

E

They see through it all

Capacitive sensors from SICK are a compact, user-friendly, and operationally safe solution for object detection and level monitoring – perfectly suited to taking on an incredibly wide range of applications.

“No can do?” No way.

There is virtually nothing that a capacitive sensor can’t detect: Wood, glass, metals, or plastics – regardless of whether the materials are solid, powdery, granular or fluid, conducting or non-conducting. Extremely compact, there is always space for this sensor, which guarantees a reliable signal even in severely contaminated environments. And all this from the other side of a wall – totally non-contact and wear-free.

Open the app now!

Discover the world of capacitive sensors

Download now!

App Store (iOS)

Google Play (Android)

E

OVERVIEW OF CAPACITIVE PROXIMITY SENSORS

Product			Housing											
			Design		Size						Mate-rial	Properties		
			Cylindrical thread design	Rectangular	M12	M18	M30	16 mm x 39.5 mm x 12 mm	28 mm x 46 mm x 5.5 mm	35 mm x 69.5 mm x 15 mm	Plastic	PTFE coating	IP 69K	
Capacitive proximity sensors														
	CM	CM12	■		■						■			
		CM18	■			■					■		■	
		CM30	■				■				■		■	
	CM PTFE		■			■					■	■		
	CQ	CQ04		■				■			■			
		CQ28		■					■		■			
		CQ35		■						■	■			

E

8014939/2016-08-29

Subject to change without notice

	Sensor properties		Application				Sensing range S_n	Page
	DC 3-wire	DC 4-wire	Factory automation	Hygienic and washdown zones	Level measurement	Object detection behind surfaces	5 10 15 20 25	
		■	■		■	■	8 mm	→ E-206
		■	■		■	■	12 mm	→ E-206
		■	■		■	■	25 mm	→ E-206
		■		■	■	■	8 mm	→ E-214
	■		■		■	■	8 mm	→ E-218
		■	■		■	■	10 mm	→ E-218
		■	■		■	■	25 mm	→ E-218

E

PRODUCT FAMILY OVERVIEW

CM

Tried-and-tested sensors for object detection and fill level detection

Technical data overview	
Housing	Cylindrical thread design
Thread size	M12 x 1 M18 x 1 M30 x 1.5
Dimensions (W x H x D)	–
Sensing range S_n	8 mm ... 25 mm
Housing material	Plastic
Enclosure rating	IP 68 / IP 68 / IP 69K
Connection	Cable / male connector
Electrical wiring	DC 4-wire

At a glance

- Cylindrical housing in M12, M18, and M30 models
- Detects powders, granulates, liquids, and solids
- Very high electromagnetic compatibility
- Electrical configuration: DC 2 and 4-wire
- Supply voltage: 10 V DC to 36 V DC
- Optical adjustment indicator
- Sensing ranges of up to 25 mm
- Enclosure rating: IP 65, IP 68, IP 69K

Detailed information ➜ E-206

E

	CM PTFE	**CQ**
	Sensors in cylindrical PTFE-housing that withstand tough environments	Reliable capacitive proximity sensors enclosed in a rectangular housing
	Cylindrical thread design	Rectangular
	M18 x 1	–
	–	16 mm x 39.5 mm x 12 mm 28 mm x 46 mm x 5.5 mm 35 mm x 69.5 mm x 15 mm
	8 mm	8 mm ... 25 mm
	PTFE	Plastic
	IP 67	IP 67 / IP 68
	Cable	Cable Male connector Cable with male connector
	DC 4-wire	DC 3-wire / DC 4-wire
	• M18 - cylindrical housing • Detects powders, granulates, liquids, and solids • Electric version: DC, 4-conductor • Supply voltage: 10 V ... 36 V DC • Short-circuit protection (pulsed) • Housing material made from PTFE • IP 67 protection class	• Rectangular housing • Detects powders, granulates, liquids, and solids • High electromagnetic compatibility • Electric version: DC, 4-conductor • Supply voltage: 10 V ... 36 V DC • Short-circuit protection (pulsed)
	➜ E-214	➜ E-218

E

TRIED-AND-TESTED SENSORS FOR OBJECT DETECTION AND FILL LEVEL DETECTION

E

Product description

Capacitive proximity sensors can detect all powdery, granulated, liquid, and solid materials – even through plastic or glass walls.

SICK's capacitive proximity sensors feature extremely high electromagnetic compatibility (EMC), which prevents false switches and sensor failure.

At a glance

- Cylindrical housing in M12, M18, and M30 models
- Detects powders, granulates, liquids, and solids
- High electromagnetic compatibility
- Electrical configuration: DC 2 and 4-wire
- Supply voltage: 10 V DC to 36 V DC
- Optical adjustment indicator
- Sensing ranges of up to 25 mm
- Enclosure rating: IP 65, IP 68, IP 69K

Your benefits

- Even functions reliable in harsh industrial environments, which reduces machine maintenance costs and downtimes
- Quick and easy adjustment can be made via the potentiometer or teach button to save valuable time during commissioning
- Highly flexible range of applications thanks to compact housing and universal mounting systems
- High shock and vibration resistance and minimal sensitivity to dust and moisture ensure reliable object detection and reduce machine maintenance costs
- Optical adjustment indicator ensures reliable object detection to minimize potential machine failures

Additional information

Detailed technical data E-207
Ordering information E-208
Dimensional drawings E-209
Connection diagram. E-210
Installation note E-211
Characteristic curve E-211
Recommended accessories E-212

➜ www.sick.com/CM

For more information, simply enter the link or scan the QR code and get direct access to technical data, CAD design models, operating instructions, software, application examples, and much more.

8014939/2016-08-29
Subject to change without notice

Detailed technical data

Features

	CM12	CM18	CM30
Housing	Cylindrical thread design		
Thread size	M12 x 1	M18 x 1	M30 x 1.5
Sensing range S_n			
Flush	8 mm	8 mm	16 mm
Non-flush	8 mm	12 mm	25 mm
Safe sensing range S_a			
Flush	5.76 mm	6.12 mm [1]	12.24 mm [1]
Non-flush	5.76 mm	9.18 mm [1]	19.13 mm [1]
Installation type	Non-flush / flush [2]	Flush / non-flush (depending on type)	
Switching frequency	Approx. 15 Hz	50 Hz	
Output type	PNP / NPN	PNP / NPN (depending on type)	
Output function	Programmable	Complementary	
Output characteristic	Wire configurable [3]	Wire configurable	
Electrical wiring	DC 4-wire		
Adjustment	Single teach-in button (Sensitivity) Cable (Sensitivity)	Potentiometer (Sensitivity)	
Enclosure rating	IP 68 [4] [5]	IP 68, IP 69K [6]	
Authorizations	CE-conformity, cULus	Ecolab, CE-conformity, cULus [7]	

[1] For flush mounting in electrically conductive materials Sa = 0.8 x Sr at temperatures <0 °C and >60 °C.
[2] For flush mounting, Teach-in necessary.
[3] Automatic detection.
[4] According to EN 60529.
[5] 1.3 m water depth / 60 min.
[6] 1 m water depth / 60 min.
[7] P3-topax 19, P3-topax 56, P3-topax 66, P3-topactive DES.

Mechanics/electronics

	CM12	CM18	CM30
Supply voltage	10 V DC ... 36 V DC		
Ripple [1]	≤ 10 %		
Voltage drop [2]	≤ 2.5 V DC		≤ 2 V DC
Current consumption [3]	≤ 12 mA		
Time delay before availability	≤ 120 ms	≤ 200 ms	
Hysteresis	3 % ... 20 %		
Repeatability [4] [5]	≤ 5 %		
Temperature drift (of S_r)	± 10 %		
EMC	According to EN 60947-5-2 [6]	According to EN 60947-5-2	
Continuous current I_a	≤ 200 mA		
Connection type	Cable, 2 m, PVC [7] / Male connector, M12 (depending on type)		
Short-circuit protection	✔		
Reverse polarity protection	✔		
Power-up pulse protection	✔		
Shock and vibration resistance	30 g, 11 ms / 10 ... 55 Hz, 1 mm	According to EN 60068	
Ambient operating temperature	–20 °C ... +85 °C	–30 °C ... +85 °C [8]	

E

	CM12	CM18	CM30
Ambient storage temperature	–40 °C ... +85 °C		
Housing material	PBT		
Tightening torque, max.	≤ 1 Nm	≤ 2.6 Nm	≤ 7.5 Nm
Items supplied	Mounting nuts (plastic), screw driver		

[1] Of Ub.
[2] At I_a max.
[3] Without load.
[4] Of Sr.
[5] Ub and Ta constant.
[6] For non-flush installation min. 1 x Sn and sensor grounded.
[7] Do not bend below 0 °C.
[8] +120 °C short time, at the front of the sensor.

Reduction factors

Note	The values are reference values which may vary
Metal	1
Water	1
PVC	Approx. 0.4
Oil	Approx. 0.25
Glass	0.6
Ceramics	0.5
Alcohol	0.7
Wood	0.2 ... 0.7

E

Ordering information

Other models ➜ www.sick.com/CM

CM12

- **Housing:** M12 x 1
- **Adjustment:** Single teach-in button (Sensitivity)
  cable (Sensitivity)

Sensing range S_n	Installation type	Output function	Output type	Connection	Connection diagram	Type	Part no.
8 mm	Non-flush, flush	Program-mable	PNP, NPN	Cable, 4-wire, 2 m, PVC	Cd-236	CM12-08EBP-KW1	6051029
				M12, 4-pin male connector	Cd-235	CM12-08EBP-KC1	6051030

CM18

- **Housing:** M18 x 1
- **Adjustment:** potentiometer (Sensitivity)

Sensing range S_n	Installation type	Output function	Output type	Connection	Connection diagram	Type	Part no.
8 mm	Flush	Comple-mentary	PNP	Cable, 4-wire, 2 m, PVC	Cd-005	CM18-08BPP-EW1	6058144
				M12, 4-pin male connector	Cd-006	CM18-08BPP-EC1	6058145
			NPN	Cable, 4-wire, 2 m, PVC	Cd-005	CM18-08BNP-EW1	6058146
				M12, 4-pin male connector	Cd-006	CM18-08BNP-EC1	6058147

8014939/2016-08-29
Subject to change without notice

Sensing range S_n	Installation type	Output function	Output type	Connection	Connection diagram	Type	Part no.
12 mm	Non-flush	Comple-mentary	PNP	Cable, 4-wire, 2 m, PVC	Cd-005	CM18-12NPP-EW1	6058148
				M12, 4-pin male connector	Cd-006	CM18-12NPP-EC1	6058149
			NPN	Cable, 4-wire, 2 m, PVC	Cd-005	CM18-12NNP-EW1	6058150
				M12, 4-pin male connector	Cd-006	CM18-12NNP-EC1	6058151

CM30

- **Housing:** M30 x 1.5
- **Adjustment:** potentiometer (Sensitivity)

Sensing range S_n	Installation type	Output func-tion	Output type	Connection	Connection diagram	Type	Part no.
16 mm	Flush	Complemen-tary	PNP	Cable, 4-wire, 2 m, PVC	Cd-005	CM30-16BPP-EW1	6058152
				M12, 4-pin male connector	Cd-006	CM30-16BPP-EC1	6058153
			NPN	Cable, 4-wire, 2 m, PVC	Cd-005	CM30-16BNP-EW1	6058154
				M12, 4-pin male connector	Cd-006	CM30-16BNP-EC1	6058155
25 mm	Non-flush	Complemen-tary	PNP	Cable, 4-wire, 2 m, PVC	Cd-005	CM30-25NPP-EW1	6058156
				M12, 4-pin male connector	Cd-006	CM30-25NPP-EC1	6058157
			NPN	Cable, 4-wire, 2 m, PVC	Cd-005	CM30-25NNP-EW1	6058158
				M12, 4-pin male connector	Cd-006	CM30-25NNP-EC1	6058159

Dimensional drawings (Dimensions in mm (inch))

E

CM12, cable

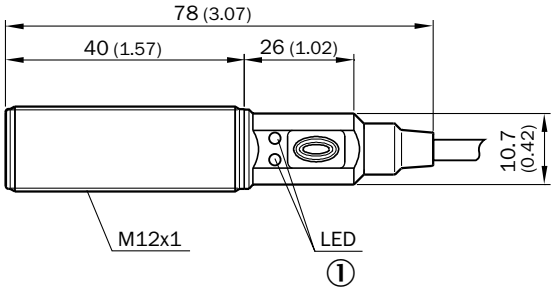

① LED yellow: output; LED green: Power and signal reserve

CM12, connector

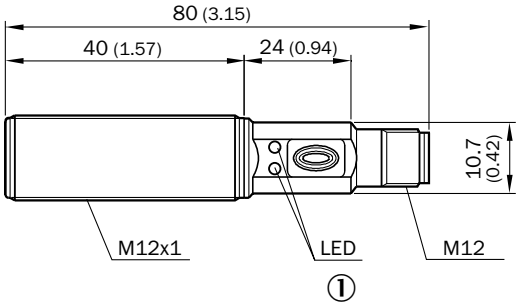

① LED yellow: output; LED green: Power and signal reserve

CM18, flush, cable

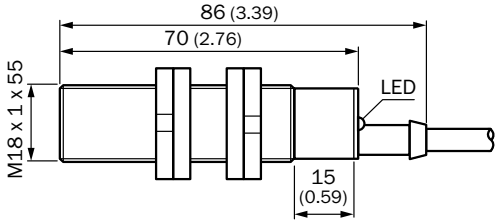

CM18, flush, connector

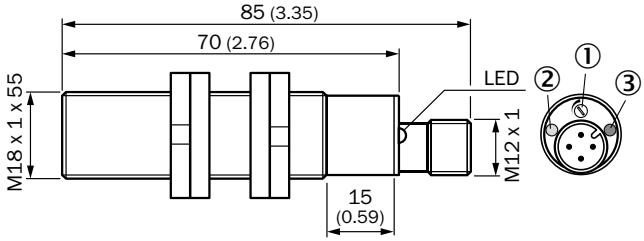

① Sensitivity control
② LED yellow: output
③ LED green: operating indicator

CM18, non-flush, cable

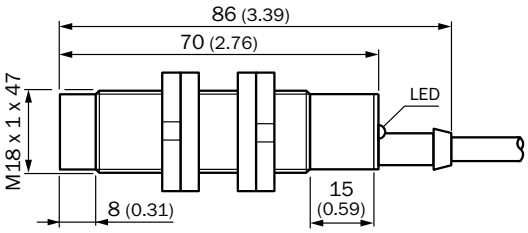

CM18, non-flush, connector

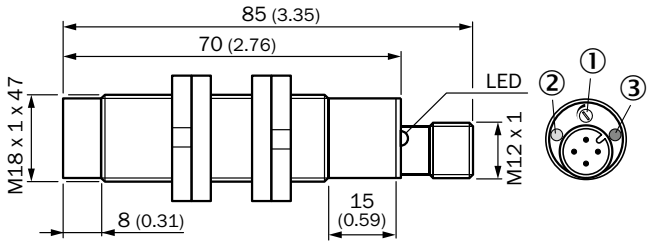

① Sensitivity control
② LED yellow: output
③ LED green: operating indicator

CM30, flush, cable

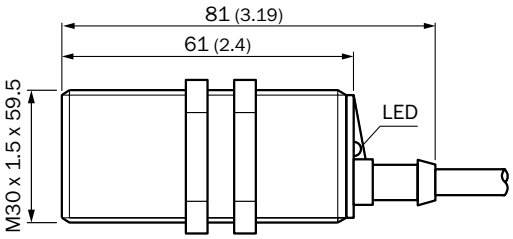

CM30, flush, connector

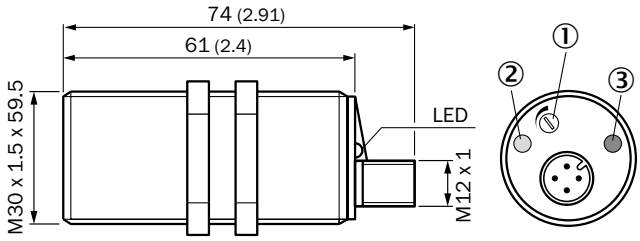

① Sensitivity control
② LED yellow: output
③ LED green: operating indicator

CM30, non-flush, cable

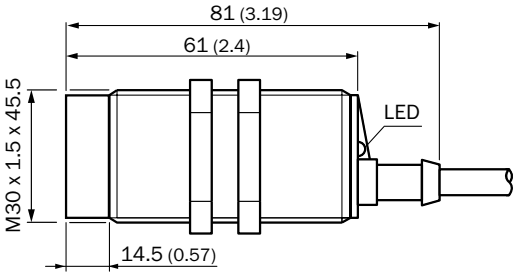

CM30, non-flush, connector

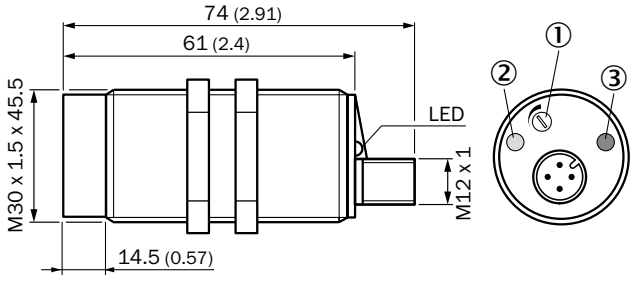

① Sensitivity control
② LED yellow: output
③ LED green: operating indicator

E

Connection diagram

Cd-005

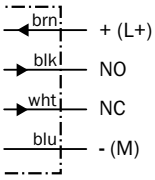

Cd-006

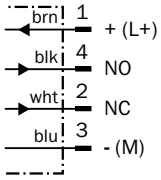

Cd-235

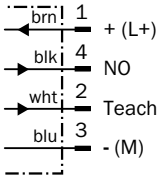

Cd-236

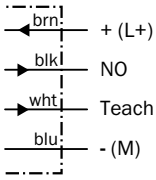

8014939/2016-08-29
Subject to change without notice

Installation note

Non-flush installation

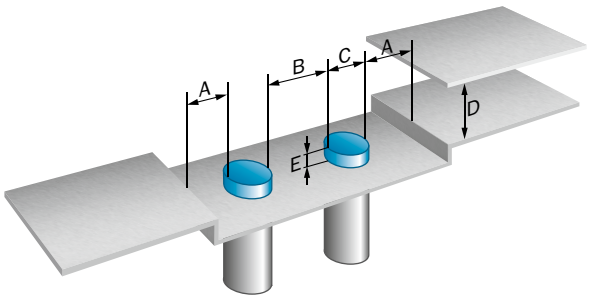

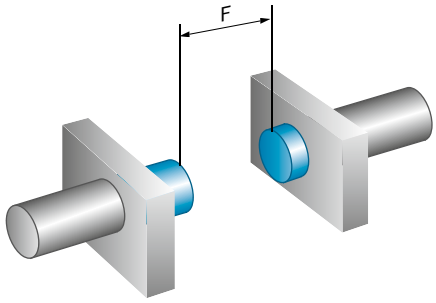

Flush installation

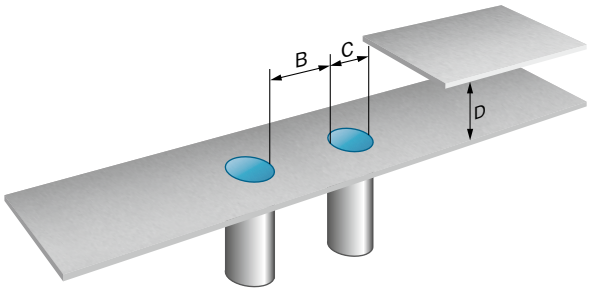

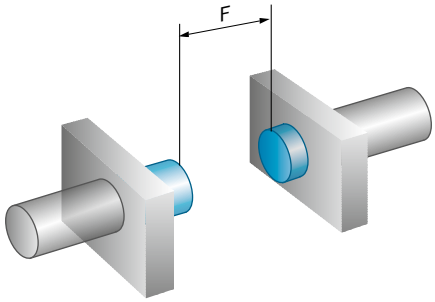

	Installation type	Sensing range Sn	A	B	C	D	E
CM12-08EBx-xx	Flush, non-flush	8 mm	-	12 mm	12 mm	12 mm	>= 8 mm
CM18-08Bxx-xxx	Flush	8 mm	-	18 mm	18 mm	18 mm	-
CM18-12Nxx-xxx	Non-flush	12 mm	18 mm	36 mm	18 mm	36 mm	>= 24 mm
CM30-16Bxx-xxx	Flush	16 mm	-	30 mm	30 mm	48 mm	-
CM30-25Nxx-xxx	Non-flush	25 mm	30 mm	60 mm	30 mm	75 mm	>= 50 mm

E

Characteristic curve

CM12

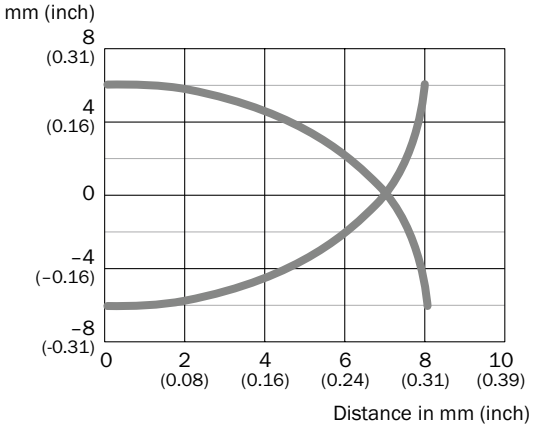

CM18, Flush installation

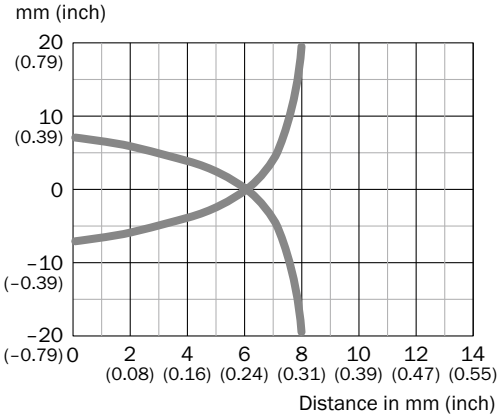

CM18, Non-flush installation

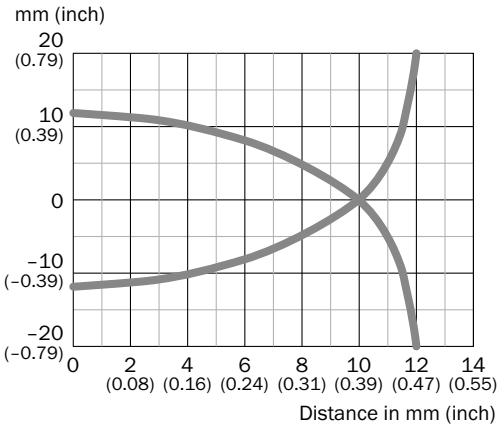

CM30, Flush installation

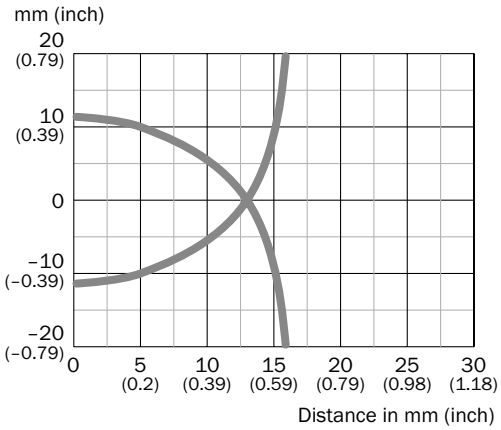

CM30, Non-flush installation

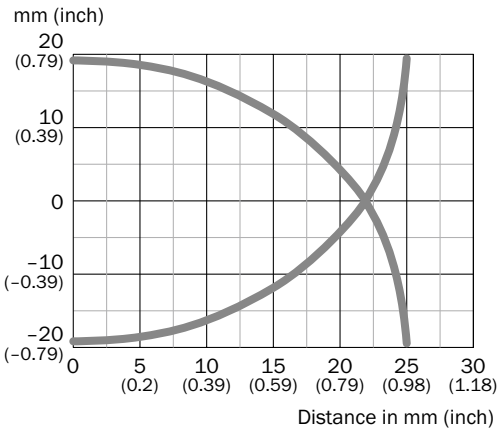

E

Recommended accessories

Figure	Accessory	Page
	Plug connectors and cables	➜ H-267
	Mounting systems	➜ H-258
	Further accessories	➜ H-280

8014939/2016-08-29
Subject to change without notice

E

SENSORS IN CYLINDRICAL PTFE-HOUSING THAT WITHSTAND TOUGH ENVIRONMENTS

Product description

Capacitive proximity sensors can detect all types of material: powder-based, granulated, liquid, and solid.
The CM18 PTFE is ideal for detecting the level of acids, alkalis, or solvents, for example. It is also used for detection in aggressive environments (acid fumes). PTFE-housing is resistant to almost all chemicals and organic solvents. FDA compliant material (PTFE) allows the use in the food and beverage industry.

At a glance

- M18 - metric housing
- Detects powders, granulates, liquids, and solids
- Extremely high electromagnetic compatibility
- Electric version: DC, 4-conductor
- Supply voltage: 10 V ... 36 V DC
- Short-circuit protection (pulsed)
- Housing material made from PTFE
- IP 67 protection class

Your benefits

- Lower maintenance costs due to a durable PTFE housing that withstands harsh ambient conditions
- Quick and easy adjustment via potentiometer saves installation and setup time
- Straightforward and safe sensor technology as an alternative to photoelectric and inductive sensors in applications such as detecting a product in a sealed box, container, or tank
- High electromagnetic compatibility prevents incorrect switching, thus increasing machine availability
- High shock and vibration resistance increases sensor life and reduces machine maintenance costs

E

Additional information

Detailed technical data E-215
Ordering information E-216
Dimensional drawings E-216
Connection diagram. E-216
Installation note E-216
Recommended accessories E-216

➜ www.sick.com/CM_PTFE

For more information, simply enter the link or scan the QR code and get direct access to technical data, CAD design models, operating instructions, software, application examples, and much more.

8014939/2016-08-29
Subject to change without notice

Detailed technical data

Features

Housing	Cylindrical thread design
Thread size	M18 x 1
Sensing range S_n	8 mm
Safe sensing range S_a	5.76 mm
Installation type	Flush
Switching frequency	± 30 Hz
Output type	PNP / NPN (depending on type)
Output function	Complementary
Electrical wiring	DC 4-wire
Adjustment	Potentiometer, 270° (Sensitivity)
Enclosure rating [1]	IP 67

[1] According to EN 60529.

Mechanics/electronics

Supply voltage	10 V DC ... 36 V
Ripple [1]	≤ 10 %
Voltage drop [2]	≤ 2.5 V DC
Current consumption [3]	≤ 10 mA
Time delay before availability	≤ 100 ms
Hysteresis	4 % ... 20 %
Repeatability [4] [5]	≤ 5 %
Temperature drift (of S_r)	± 10 %
EMC [6]	According to EN 60947-5-2
Continuous current I_a	≤ 200 mA
Connection type [7]	Cable, 2 m, PVC
Short-circuit protection	✔
Reverse polarity protection	✔
Power-up pulse protection	✔
Shock and vibration resistance	30 g, 11 ms / 10 ... 55 Hz, 1 mm
Ambient operating temperature	–25 °C ... +60 °C
Housing material	PTFE
Tightening torque, max.	≤ 2.6 Nm

[1] Of Ub.
[2] At I_a max.
[3] Without load.
[4] Of Sr.
[5] Ub and Ta constant.
[6] In EMC critical applications, conducted interference levels may lie within the frequency range of the oscillator. This can cause changes to the output signal. (See operating instructions.)
[7] Do not bend below 0 °C.

Reduction factors

Note	The values are reference values which may vary
Metal	1
Water	1
PVC	Approx. 0.4

Oil	Approx. 0.25
Glass	0.6
Ceramics	0.5
Alcohol	0.7
Wood	0.2 ... 0.7

Ordering information

Other models ➔ www.sick.com/CM_PTFE

- **Installation type:** flush
- **Output function:** Complementary

Sensing range S_n	Output type	Connection	Connection diagram	Type	Part no.
8 mm	PNP	Cable, 4-wire, 2 m, PVC	Cd-005	CM18-08BPP-TW0	6026195
	NPN	Cable, 4-wire, 2 m, PVC	Cd-005	CM18-08BNP-TW0	6026194

Dimensional drawings (Dimensions in mm (inch))

CM18 PTFE, flush, cable

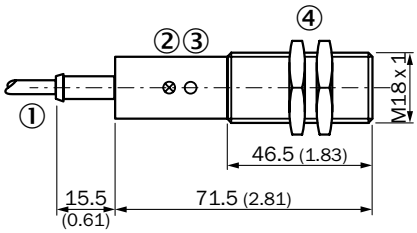

① Connection
② LED yellow: output
③ Potentiometer
④ Fastening nuts (2 x); 34 mm hex, plastic

Connection diagram

Cd-005

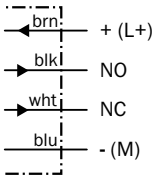

Installation note

Flush installation

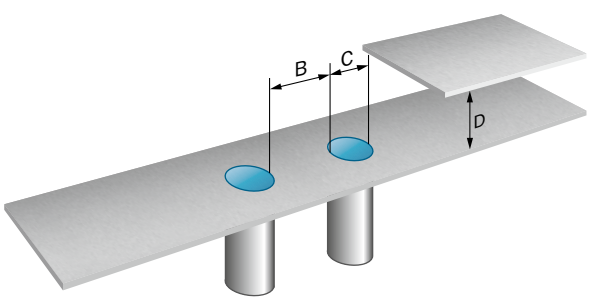

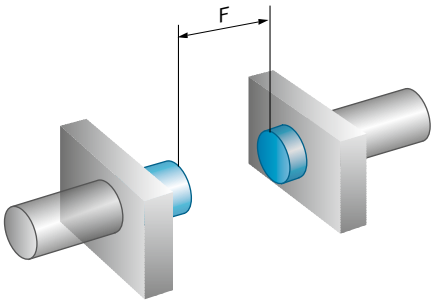

	Installation	Sensing range Sn	B	C	D
CM18-08Bxx-xxx	Flush	8 mm	18 mm	18 mm	24 mm

Recommended accessories

Figure	Accessory	Page
	Plug connectors and cables	➜ H-267
	Mounting systems	➜ H-258
	Further accessories	➜ H-280

E

RELIABLE CAPACITIVE PROXIMITY SENSORS ENCLOSED IN A RECTANGULAR HOUSING

Product description

Capacitive proximity sensors can detect all types of material: powder-based, granulated, liquid, and solid – even through plastic walls. SICK's capacitive proximity sensors also feature high electromagnetic compatibility (EMC), which prevents incorrect switching.
CQ sensors feature rectangular housings that are suitable for all manner of installation conditions.

At a glance

- Rectangular housing
- Detects powders, granulates, liquids, and solids
- Extremely high electromagnetic compatibility
- Electric version: DC, 4-conductor
- Supply voltage: 10 V ... 36 V DC
- Short-circuit protection (pulsed)

Your benefits

- Non-contact level measurement, even through container or tank walls, which eliminates drilling holes and thus reduces installation time
- Durable housing withstands harsh industrial applications, reducing maintenance costs
- Quick and easy adjustment of the switching point - via pushbutton, remote teach for the CQ28 and via potentiometer for CQ35 and CQ4 - saves time

E

Additional information

Detailed technical data E-219
Ordering information E-220
Dimensional drawings E-221
Connection diagram. E-222
Installation note E-223
Characteristic curve E-223
Recommended accessories E-224

→ www.sick.com/CQ

For more information, simply enter the link or scan the QR code and get direct access to technical data, CAD design models, operating instructions, software, application examples, and much more.

8014939/2016-08-29
Subject to change without notice

Detailed technical data

Features

	CQ4	CQ28	CQ35
Housing	Rectangular		
Dimensions (W x H x D)	16 mm x 39.5 mm x 12 mm	28 mm x 46 mm x 5.5 mm	35 mm x 69.5 mm x 15 mm
Sensing range S_n	8 mm	10 mm	25 mm
Safe sensing range S_a	5.76 mm	7.2 mm	18 mm
Installation type	Non-flush / flush		
Switching frequency	100 Hz	± 10 Hz	50 Hz
Output type	PNP / NPN (depending on type)		
Output function	NO / NC (depending on type)	Complementary	
Electrical wiring	DC 3-wire	DC 4-wire	
Adjustment	Potentiometer, 5 turns (Sensitivity)	Single teach-in button (Sensitivity) Cable (Sensitivity)	Potentiometer, 270° (Sensitivity)
Enclosure rating [1]	IP 67	IP 68	IP 67

[1] According to EN 60529.

Mechanics/electronics

	CQ4	CQ28	CQ35
Supply voltage	10 V DC ... 30 V DC		10 V DC ... 36 V
Ripple	≤ 10 %		≤ 10 % [1]
Voltage drop [2]	≤ 2.5 V DC		
Current consumption [3]	≤ 12 mA		≤ 10 mA
Time delay before availability	≤ 200 ms	≤ 300 ms	≤ 100 ms
Hysteresis	4 % ... 20 % [4]	–	4 % ... 20 %
Repeatability [5] [6]	≤ 5 %		
Temperature drift (of S_r)	± 20 %	± 10 %	
EMC	According to EN 60947-5-2	According to EN 60947-5-2 [7]	
Continuous current I_a	≤ 150 mA	≤ 200 mA	
Connection type	Cable, 2 m, PVC [8] Male connector, M8 Cable with male connector, M8, 0.3 m, PVC [8] (depending on type)	Cable, 2 m, PVC [8]	Cable, 2 m, PVC [8] Male connector, M12 (depending on type)
Short-circuit protection	✔		
Reverse polarity protection	✔		
Power-up pulse protection	✔		
Shock and vibration resistance	30 g, 11 ms / 10 ... 55 Hz, 1 mm		
Ambient operating temperature	–20 °C ... +75 °C	–20 °C ... +85 °C	–25 °C ... +75 °C
Ambient storage temperature	–40 °C ... +85 °C		–
Housing material	ABS	PBT	PC
Sensing face material	ABS	PBT	PC

[1] Of Ub.
[2] At I_a max.
[3] Without load.
[4] Depending on installation and environmental conditions and sensitivity adjustment, hysteresis may vary.
[5] Of Sr.
[6] Ub and Ta constant.
[7] In EMC critical applications, conducted interference levels may lie within the frequency range of the oscillator. This can cause changes to the output signal. (See operating instructions.)
[8] Do not bend below 0 °C.

E

Reduction factors

Note	The values are reference values which may vary
Metal	1
Water	1
PVC	Approx. 0.4
Oil	Approx. 0.25
Glass	0.6
Ceramics	0.5
Alcohol	0.7
Wood	0.2 ... 0.7

Ordering information

Other models ➜ www.sick.com/CQ

CQ4

- **Installation type:** non-flush, flush

Sensing range S_n	Output function	Output type	Connection	Connection diagram	Type	Part no.
8 mm	NO	PNP	Cable, 3-wire, 2 m, PVC	Cd-043	CQ4-08EPSKU1	6051009
			Connector M8, 3-pin	Cd-045	CQ4-08EPSKT1	6051004
			Cable with connector M8, 3-pin, 0.3 m, PVC	Cd-045	CQ4-08EPSKP1	6051000
		NPN	Cable, 3-wire, 2 m, PVC	Cd-043	CQ4-08ENSKU1	6051011
			Connector M8, 3-pin	Cd-045	CQ4-08ENSKT1	6051006
			Cable with connector M8, 3-pin, 0.3 m, PVC	Cd-045	CQ4-08ENSKP1	6051002
	NC	PNP	Cable, 3-wire, 2 m, PVC	Cd-043	CQ4-08EPOKU1	6051010
			Connector M8, 3-pin	Cd-045	CQ4-08EPOKT1	6051005
			Cable with connector M8, 3-pin, 0.3 m, PVC	Cd-045	CQ4-08EPOKP1	6051001
		NPN	Cable, 3-wire, 2 m, PVC	Cd-043	CQ4-08ENOKU1	6051012
			Connector M8, 3-pin	Cd-045	CQ4-08ENOKT1	6051007
			Cable with connector M8, 3-pin, 0.3 m, PVC	Cd-045	CQ4-08ENOKP1	6051003

CQ28

- **Installation type:** non-flush

Sensing range S_n	Output function	Output type	Connection	Connection diagram	Type	Part no.
10 mm	Complementary	PNP	Cable, 4-wire, 2 m, PVC	Cd-023	CQ28-10NPP-KW1	6030132
		NPN	Cable, 4-wire, 2 m, PVC	Cd-023	CQ28-10NNP-KW1	6030133

CQ35

- **Installation type:** non-flush

Sensing range S_n	Output function	Output type	Connection	Connection diagram	Type	Part no.
25 mm	Complementary	PNP	Cable, 4-wire, 2 m, PVC	Cd-005	CQ35-25NPP-KW1	6020478
			M12, 4-pin male connector	Cd-006	CQ35-25NPP-KC1	6020479
		NPN	Cable, 4-wire, 2 m, PVC	Cd-005	CQ35-25NNP-KW1	6021463
			M12, 4-pin male connector	Cd-006	CQ35-25NNP-KC1	6021464

Dimensional drawings (Dimensions in mm (inch))

CQ4, cable

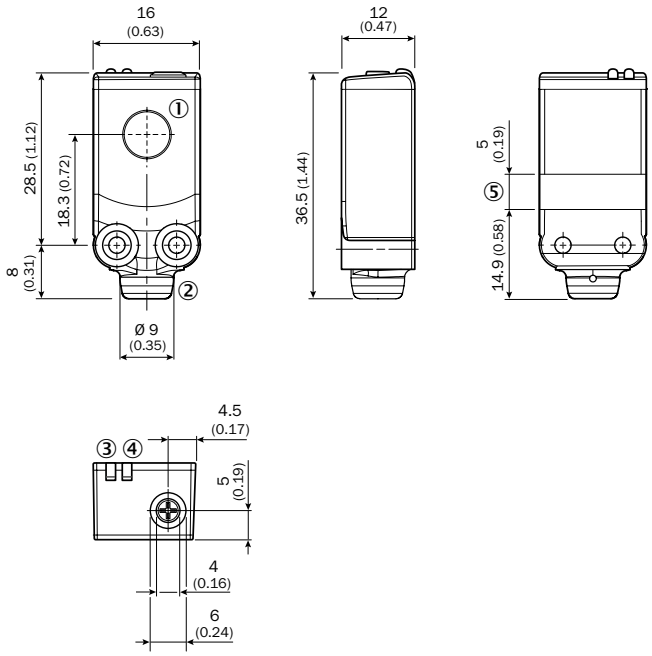

① Sensing face
② Cable connection
③ Yellow LED: output
④ LED green: operating indicator
⑤ Line for cable tie

CQ4, connector

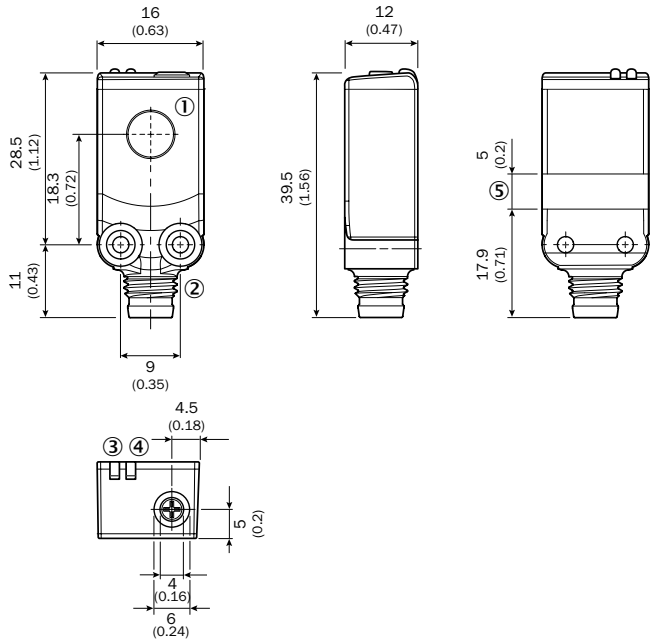

① Sensing face
② Connector M8, 3-pin
③ Yellow LED: output
④ LED green: operating indicator
⑤ Line for cable tie

E

CQ28, cable

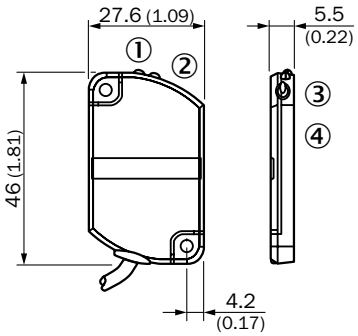

① Green LED: safe / unsafe detection state
② Yellow LED: output
③ Teach-in button
④ Sensing face

CQ35, cable

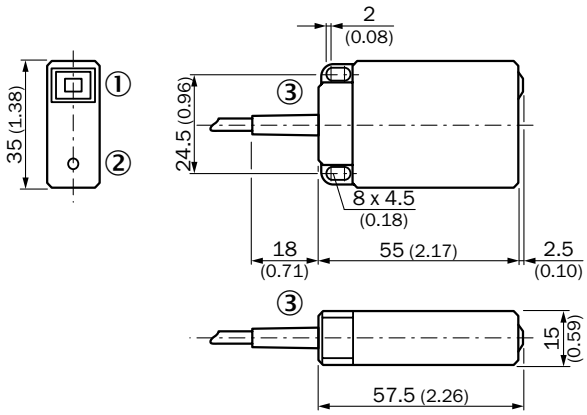

① Yellow LED: output
② Potentiometer
③ Connection

CQ35, connector

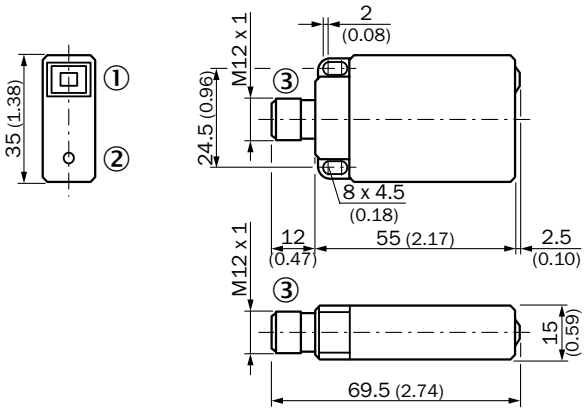

① Yellow LED: output
② Potentiometer
③ Connection

Connection diagram

Cd-005

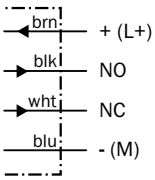

Cd-006

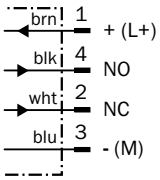

Cd-023

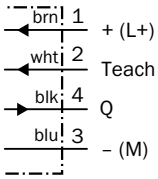

Cd-043

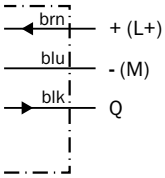

Cd-045

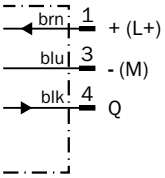

Installation note

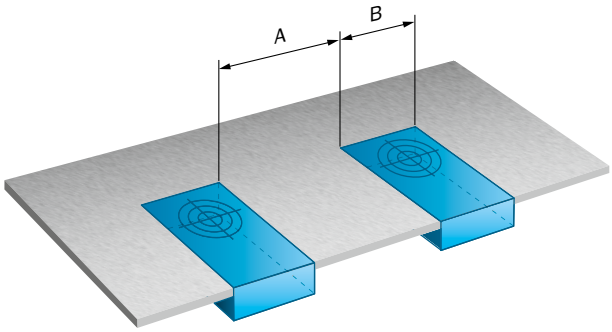

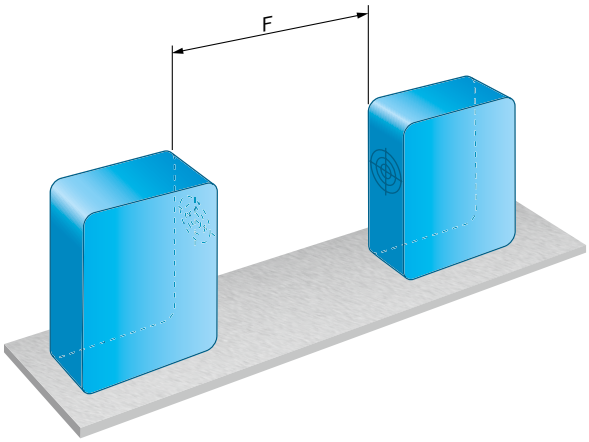

	Installation	Sensing range Sn	A	B
CQ4	Flush, non-flush	8 mm	16 mm	16 mm
CQ28	Non-flush	10 mm	>= 27.6 mm	27.6 mm
CQ35	Non-flush	25 mm	>= 35 mm	35 mm

Characteristic curve

CQ4, Non-flush installation

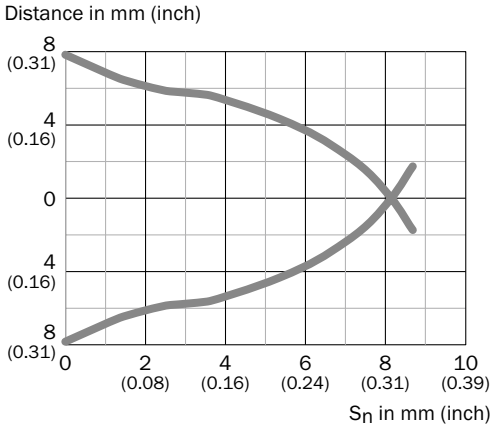

CQ4, Flush installation

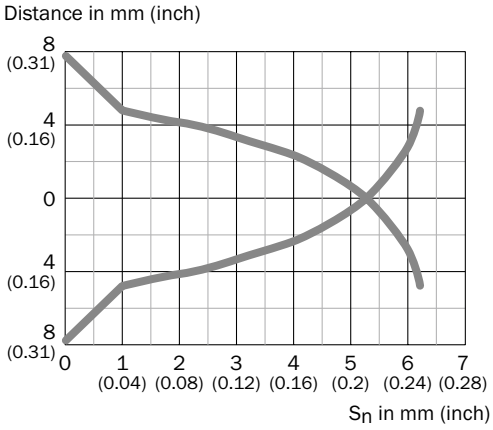

CQ28

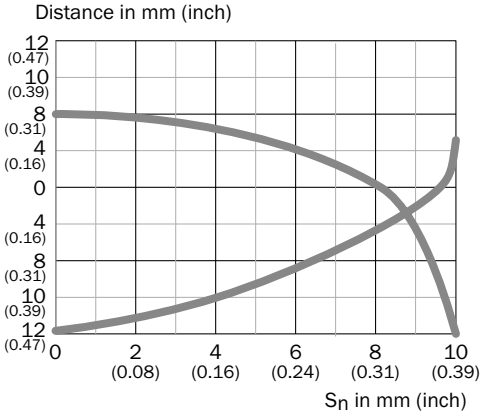

CQ35

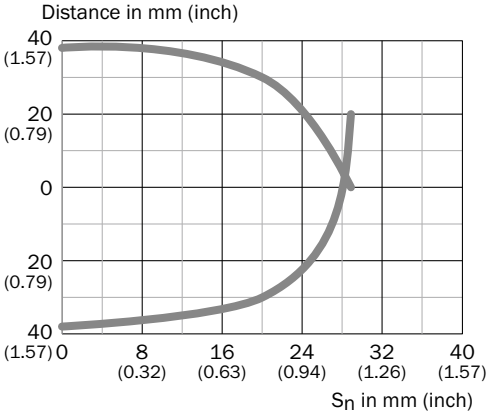

E

Recommended accessories

Figure	Accessory	Page
	Plug connectors and cables	➜ H-267
	Mounting systems	➜ H-258
	Further accessories	➜ H-280

E

8014939/2016-08-29
Subject to change without notice

E

MAGNETIC PROXIMITY SENSORS

F

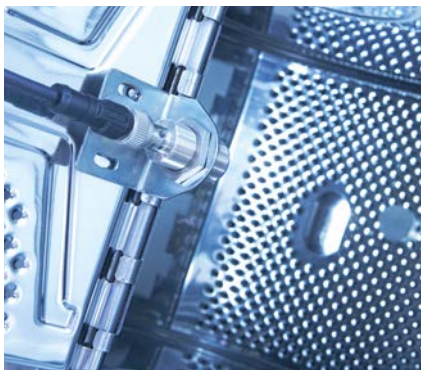

Magnetic proximity sensors with maximum operating distances and a minimal design

SICK offers an extensive portfolio of magnetic proximity sensors in metric (MM) and rectangular (MQ) configurations. Magnetic proximity sensors provide long sensing ranges that can reliably detect magnetic objects, with entirely new application options opened up due to the smaller magnets. MM sensors in NAMUR design for the use in explosion-hazardous areas complete this comprehensive product family. MQ sensors offer all the advantages of a magnetic proximity sensor in a compact plastic housing. Magnetic proximity sensors are designed specifically for use in harsh environments and are unaffected by dust, heat, or vibrations. Typical fields of application are also those where other sensors reach the limits of their technology.

Selection guide F-228
Product family overview F-230
Technology I-284

MM F-232
Magnetic proximity sensors in common M8, M12, and M18 cylindrical housing

MM Namur F-240
NAMUR magnetic proximity sensors in a cylindrical housing for explosive areas

MQ F-246
Magnetic proximity sensors in a rectangular housing

F

OVERVIEW OF MAGNETIC PROXIMITY SENSORS

Product			Housing									
			Design		Size				Material			
			Cylindrical thread design	Rectangular	M8	M12	M18	10.3 mm x 37 mm x 16 mm	Nickel plated brass	Stainless steel	VISTAL™	
Magnetic proximity sensors												
	MM	MM08	■		■				■			
		MM12	■			■			■			
		MM18	■				■		■	■		
	MM Namur	MM12 Namur	■			■			■			
		MM18 Namur	■				■		■			
	MQ	MQ10		■				■			■	

F

8014939/2016-08-29
Subject to change without notice

	Sensor properties		Application			Sensing range S_n	Page
	DC 3-wire	NAMUR output	Factory automation	Explosion-hazardous areas	Object detection behind surfaces	20 40 60 80 100 120	
	■		■		■	60 mm	→ F-232
	■		■		■	90 mm	→ F-232
	■		■		■	120 mm	→ F-232
		■		■	■	90 mm	→ F-240
		■		■	■	120 mm	→ F-240
	■		■		■	60 mm	→ F-246

F

PRODUCT FAMILY OVERVIEW

MM

Magnetic proximity sensors in common M8, M12, and M18 cylindrical housing

Technical data overview	
Housing	Cylindrical thread design
Thread size	M8 x 1 M12 x 1 M18 x 1
Housing	–
Sensing range S_n	≤ 120 mm
Housing material	Nickel-plated brass
Enclosure rating	IP 67
Connection	Connector M8, 3-pin / Cable, 3-wire / M12, 4-pin male connector

At a glance

- Types: M8 to M18
- Sensing range: up to 120 mm
- Electrical configuration: DC 3-wire
- Enclosure rating: IP 67
- Temperature range: –25 °C to +75 °C
- Nickel-plated brass housing; plastic sensing face
- Reliable detection of permanent magnets through non-ferromagnetic materials such as stainless steel, aluminum, plastic or wood
- Solves high-temperature applications by installing the permanent magnet in the high-temperature area and the sensor behind an insulated area

Detailed information ➜ F-232

F

	MM Namur	**MQ**
	NAMUR magnetic proximity sensors in a cylindrical housing for explosive areas	Magnetic proximity sensors in a rectangular housing
	Cylindrical thread design	Rectangular
	M12 x 1 M18 x 1	–
	–	10 mm x 16 mm x 28 mm
	≤ 120 mm	≤ 60 mm
	Nickel-plated brass / Stainless steel V4A (1.4404, 316L)	VISTAL™
	IP 67	IP 67, IP 68
	M12, 4-pin male connector / Cable, 2-wire / Cable with connector M9, 5-pin, with knurled nuts	Connector M8, 3-pin / Cable, 3-wire / Cable with connector M12, 3-pin
	• Types: M12 to M18 • Sensing range: up to 120 mm • Electrical configuration: NAMUR • Enclosure rating: IP 67 • Temperature range: –25 °C to +70 °C • Nickel-plated brass housing; plastic sensing face • Reliable detection of permanent magnets through non-ferromagnetic materials such as stainless steel, aluminum, plastic or wood • NAMUR design for usage in explosion-hazardous areas	• Type: 10 mm x 28 mm x 16 mm • Sensing ranges: up to 60 mm • Electrical configuration: DC, 3-wire • Enclosure rating: IP 67, IP 68 • Temperature range: –25 °C to +75 °C • Tough VISTAL™ housing • Reliable detection of permanent magnets through non-ferromagnetic materials such as stainless steel, aluminum, plastic or wood • Solves high-temperature applications by installing the permanent magnet in the high-temperature area and the sensor behind an insulated area
	➜ F-240	➜ F-246

F

MAGNETIC PROXIMITY SENSORS IN COMMON M8, M12, AND M18 CYLINDRICAL HOUSING

Product description

MM magnetic proximity sensors provide long sensing ranges that can reliably detect magnetic objects. Magnetic proximity sensors are resistant to dust, heat, vibrations and other harsh environments. The MM magnetic sensors are enclosed in a cylindrical housing and are available in sizes MM08, MM12 and MM18.

At a glance

- Types: M8 to M18
- Sensing range: up to 120 mm
- Electrical configuration: DC 3-wire
- Enclosure rating: IP 67
- Temperature range: –25 °C to +75 °C
- Nickel-plated brass housing; plastic sensing face
- Reliable detection of permanent magnets through non-ferromagnetic materials such as stainless steel, aluminum, plastic or wood
- Solves high-temperature applications by installing the permanent magnet in the high-temperature area and the sensor behind an insulated area

Your benefits

- Non-contact operation eliminates interference from dirt, dust and vibrations, increasing sensor life and reducing maintenance costs
- Space-saving installation due to small design
- Large operating ranges with reliable switching increase throughput
- Non-contact, universal detection through several substances, including plastic containers and pipes protective PTFE walls and non-magnetic metal walls

F

CE

Additional information

Detailed technical data F-233
Ordering information F-234
Dimensional drawings F-235
Connection diagram. F-236
Maximum sensing range F-236
Installation notes F-237
Recommended accessories F-238

➜ www.sick.com/MM

For more information, simply enter the link or scan the QR code and get direct access to technical data, CAD design models, operating instructions, software, application examples, and much more.

8014939/2016-08-29
Subject to change without notice

Detailed technical data

Features

	Standard sensing range			Extended sensing range	
	MM08	MM12	MM18	MM12	MM18
Housing	Cylindrical thread design				
Thread size	M8 x 1	M12 x 1	M18 x 1	M12 x 1	M18 x 1
Sensing range S_n [1]	60 mm		70 mm	90 mm	120 mm
Safe sensing range S_a	48.6 mm		56.7 mm	72.9 mm	97.2 mm
Magnetic sensitivity	1 mT		0.7 mT	0.6 mT	0.4 mT
Switching frequency	1,000 Hz			5,000 Hz	
Output type	PNP / NPN (depending on type)				PNP
Output function	NO	NO / NC (depending on type)		NO	
Electrical wiring	DC 3-wire				
Magnetic alignment	Axial				
Enclosure rating [2]	IP 67				

[1] Sensing range based on installation in non-magnetic material using Magnet MAG-3010-B (M4.0)
[2] According to EN 60529.

Mechanics/electronics

	Standard sensing range			Extended sensing range	
	MM08	MM12	MM18	MM12	MM18
Supply voltage	10 V DC ... 30 V DC				
Ripple [1]	≤ 10 %				
Voltage drop [2]	≤ 2 V			≤ 1.5 V	≤ 2 V
Current consumption	≤ 10 mA [3]				
Time delay before availability	≤ 20 ms			≤ 2 ms	≤ 100 ms
Hysteresis	1 % ... 10 %				1 % ... 20 %
Repeatability [4]	≤ 1 %				
Temperature drift (of S_r)	± 10 %				
EMC	According to EN 60947-5-2				
Continuous current I_a	≤ 200 mA			≤ 300 mA	≤ 200 mA
Connection type	Male connector, M8 Cable, 2 m, PUR/PVC [5] (depending on type)	Male connector, M12 Cable, 2 m, PUR/PVC [5] (depending on type)			
Short-circuit protection [6]	✔				
Reverse polarity protection	✔				
Power-up pulse protection	✔				
Shock and vibration resistance	30 g, 11 ms / 10 ... 55 Hz, 1 mm				
Ambient operating temperature	–25 °C ... +75 °C				
Housing material	Nickel-plated brass				
Tightening torque, max.	6 Nm	15 Nm	40 Nm	7 Nm	40 Nm
Items supplied	Fastening nuts (Metal, 2 x)				

[1] Of V_S.
[2] At I_a max.
[3] Without load.
[4] Von Sr (VS und Ta constant)
[5] Do not bend below 0 °C.
[6] Pulsed.

F

Ordering information

Other models ➔ www.sick.com/MM

MM08, standard sensing range

- **Magnetic sensitivity:** 1 mT

Sensing range S_n	Output function	Output type	Connection	Connection diagram	Type	Part no.
≤ 60 mm	NO	PNP	Connector M8, 3-pin	Cd-002	MM08-60APS-ZTK	1040067
			Cable, 3-wire, 2 m, PUR/PVC	Cd-001	MM08-60APS-ZUK	1040027
		NPN	Connector M8, 3-pin	Cd-002	MM08-60ANS-ZTK	1040068
			Cable, 3-wire, 2 m, PUR/PVC	Cd-001	MM08-60ANS-ZUK	1040066

MM12, standard sensing range

- **Magnetic sensitivity:** 1 mT

Sensing range S_n	Output function	Output type	Connection	Connection diagram	Type	Part no.
≤ 60 mm	NO	PNP	M12, 4-pin male connector	Cd-011	MM12-60APS-ZCK	1040070
			Cable, 3-wire, 2 m, PUR/PVC	Cd-002	MM12-60APS-ZUK	1040069
		NPN	M12, 4-pin male connector	Cd-011	MM12-60ANS-ZCK	1040071
			Cable, 3-wire, 2 m, PUR/PVC	Cd-002	MM12-60ANS-ZUK	1040026
	NC	PNP	Cable, 3-wire, 2 m, PUR/PVC	Cd-003	MM12-60APO-ZUK	1040065

MM18, standard sensing range

- **Magnetic sensitivity:** 0.7 mT

Sensing range S_n	Output function	Output type	Connection	Connection diagram	Type	Part no.
≤ 70 mm	NO	PNP	M12, 4-pin male connector	Cd-011	MM18-70APS-ZCK	1040072
			Cable, 3-wire, 2 m, PUR/PVC	Cd-001	MM18-70APS-ZUK	1040029
		NPN	M12, 4-pin male connector	Cd-011	MM18-70ANS-ZCK	1040073
			Cable, 3-wire, 2 m, PUR/PVC	Cd-001	MM18-70ANS-ZUK	1040085
	NC	PNP	M12, 4-pin male connector	Cd-279	MM18-70APO-ZCK	1047255

MM12, extended sensing range

- **Magnetic sensitivity:** 0.6 mT

Sensing range S_n	Output function	Output type	Connection	Connection diagram	Type	Part no.
≤ 90 mm	NO	PNP	M12, 4-pin male connector	Cd-011	MM12-90APS-ZC0	1029950
			Cable, 3-wire, 2 m, PUR/PVC	Cd-001	MM12-90APS-ZU0	1029951
		NPN	Cable, 3-wire, 2 m, PUR/PVC	Cd-001	MM12-90ANS-ZU0	1051013

MM18, extended sensing range

- **Magnetic sensitivity:** 0.4 mT

Sensing range S_n	Output function	Output type	Connection	Connection diagram	Type	Part no.
≤ 120 mm	NO	PNP	M12, 4-pin male connector	Cd-011	MM18-00APS-ZCK	1076085
			Cable, 3-wire, 2 m, PUR/PVC	Cd-001	MM18-00APS-ZUK	1077120

Dimensional drawings (Dimensions in mm (inch))

MM08, connector, standard sensing range

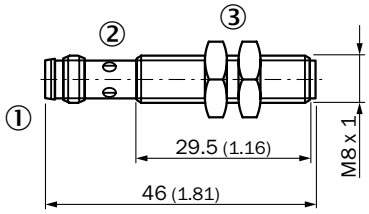

① Connection
② Indication LED
③ Fastening nuts (2 x); width across 13, plastic

MM08, cable, standard sensing range

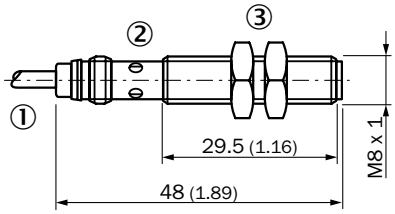

① Connection
② Indication LED
③ Fastening nuts (2 x); width across 13, plastic

MM12, connector, standard sensing range

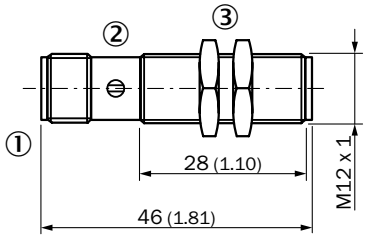

① Connection
② Indication LED
③ Fastening nuts (2x); width across 17, metal

MM12, cable, standard sensing range

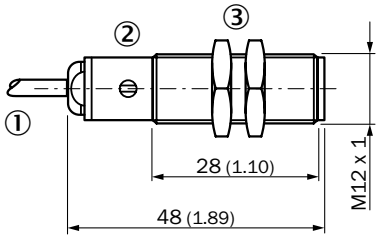

① Connection
② Indication LED
③ Fastening nuts (2x); width across 17, metal

MM18, connector, standard / extended sensing range

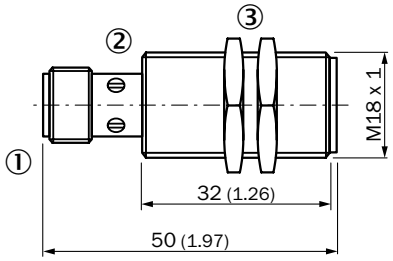

① Connection
② Indication LED
③ Fastening nuts (2x); width across 17, metal

MM18, cable, standard / extended sensing range

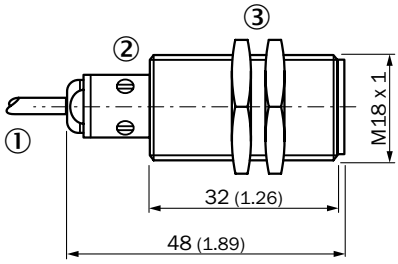

① Connection
② Indication LED
③ Fastening nuts (2x); width across 17, metal

MM12, connector, extended sensing range

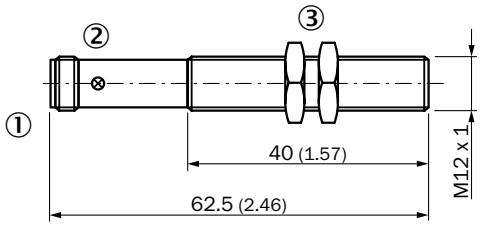

① Connection
② Indication LED
③ Fastening nuts (2x); width across 17, metal

MM12, cable, extended sensing range

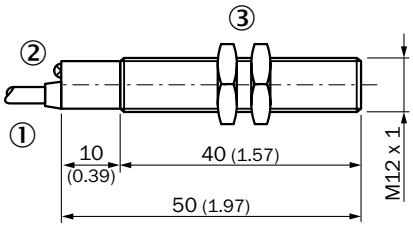

① Connection
② Indication LED
③ Fastening nut; 24 mm hex, metal

F

Connection diagram

Cd-001

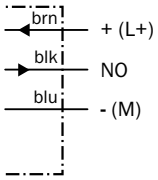

Cd-002

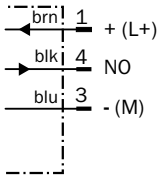

Cd-003

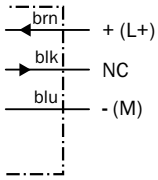

Cd-011

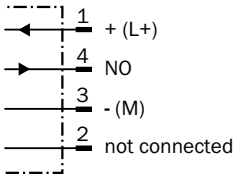

Cd-279

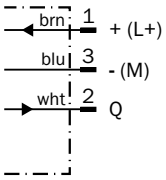

Maximum sensing range

MMxx-60Axx-xxx

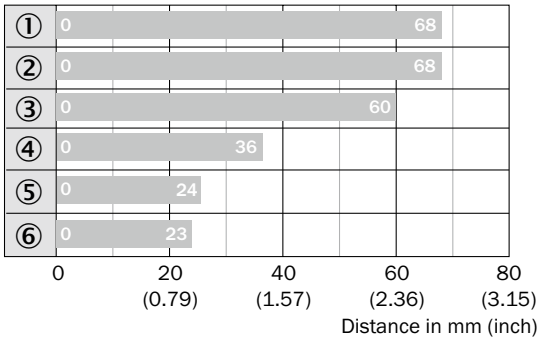

Max. sensing range S_n, flush or non-flush installation, non-magnetizable material

Magnet type	Part no.
① MAG-3315-B (M 5.1)	7902086
② MAG-3015-B (M 5.0)	7901786
③ MAG-3010-B (M 4.0)	7901785
④ MAG-2006-B (M 3.0)	7901784
⑤ MAG-0625-A (M 2.0)	7901783
⑥ MAG-1003-S (M 1.0)	7901782

MMxx-70Axx-xxx

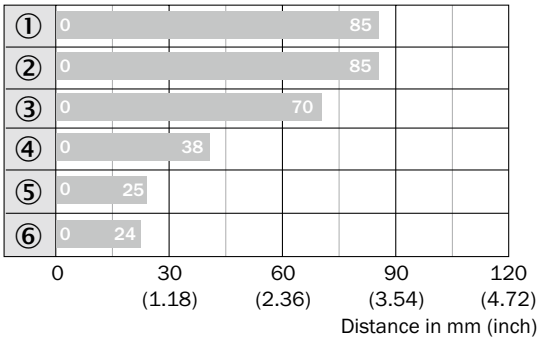

Max. sensing range S_n, flush or non-flush installation, non-magnetizable material

Magnet type	Part no.
① MAG-3315-B (M 5.1)	7902086
② MAG-3015-B (M 5.0)	7901786
③ MAG-3010-B (M 4.0)	7901785
④ MAG-2006-B (M 3.0)	7901784
⑤ MAG-0625-A (M 2.0)	7901783
⑥ MAG-1003-S (M 1.0)	7901782

F

MMxx-90Axx-xxx

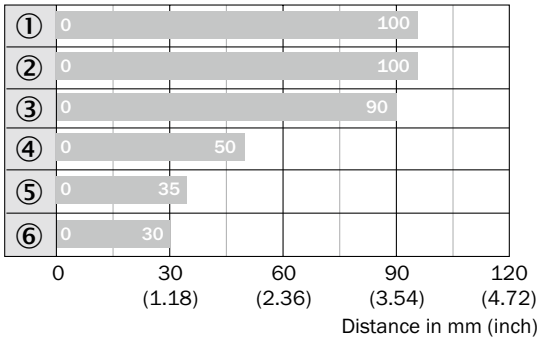

Max. sensing range S_n, flush or non-flush installation, non-magnetizable material

Magnet type	Part no.
① MAG-3315-B (M 5.1)	7902086
② MAG-3015-B (M 5.0)	7901786
③ MAG-3010-B (M 4.0)	7901785
④ MAG-2006-B (M 3.0)	7901784
⑤ MAG-0625-A (M 2.0)	7901783
⑥ MAG-1003-S (M 1.0)	7901782

MMxx-00Axx-xxx

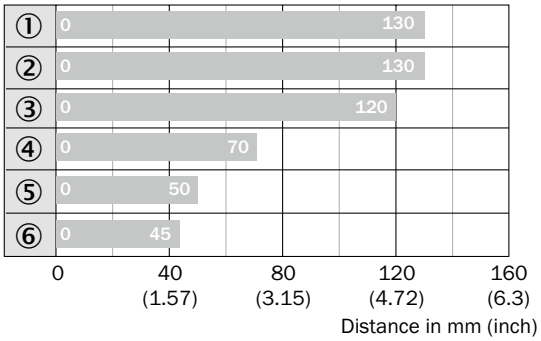

Max. sensing range S_n, flush or non-flush installation, non-magnetizable material

Magnet type	Part no.
① MAG-3315-B (M 5.1)	7902086
② MAG-3015-B (M 5.0)	7901786
③ MAG-3010-B (M 4.0)	7901785
④ MAG-2006-B (M 3.0)	7901784
⑤ MAG-0625-A (M 2.0)	7901783
⑥ MAG-1003-S (M 1.0)	7901782

Installation notes

Flush sensor installation

Magnetic proximity sensors can be installed flush in all materials and metals with affecting the sensing range with the exception of magnetizable materials.

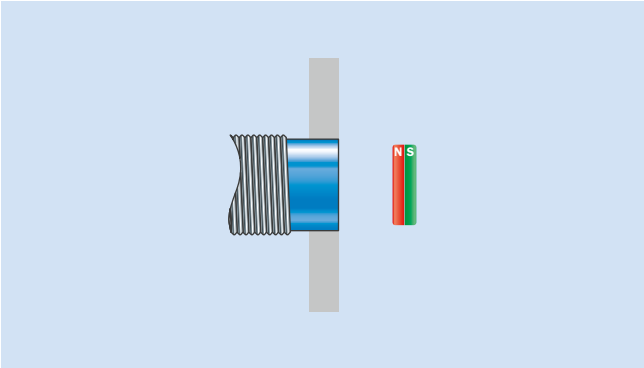

Non-flush sensor installation

The table shows how much the proximity sensor must protrude when installed in magnetic materials to prevent a reduction in the sensing range by more than 5%. Measurement standard MAG-3010-B (M 4.0).

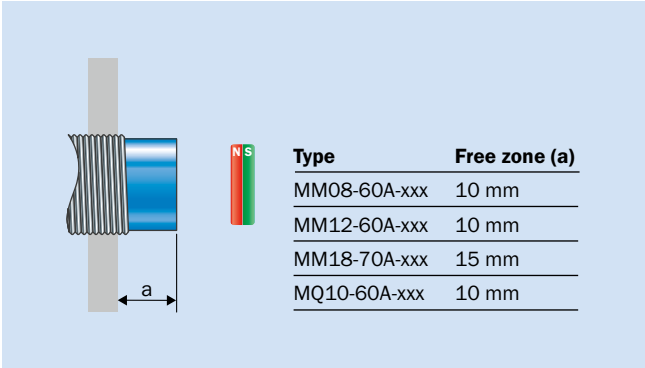

Type	Free zone (a)
MM08-60A-xxx	10 mm
MM12-60A-xxx	10 mm
MM18-70A-xxx	15 mm
MQ10-60A-xxx	10 mm

F

Recommended accessories

Magnets

Figure	Description	Dimensions	Diameter	Type	Part no.
	Magnet without mounting hole, Ø 6 mm, height 25 mm	25 mm	6 mm	MAG-0625-A	7901783
	Magnet without mounting hole, Ø 10 mm, height 3 mm	3 mm	10 mm	MAG-1003-S	7901782
	Magnet without mounting hole, Ø 30 mm, height 10 mm	10 mm	30 mm	MAG-3010-B	7901785
	Magnet with mounting hole for M4 counter-sunk screw, Ø 20 mm, height 6.5 mm	6.5 mm	20 mm	MAG-2006-B	7901784
	Magnet with mounting hole for M5 flat head screw, Ø 31 mm, height 15 mm	15 mm	31 mm	MAG-3015-B	7901786
	Magnet with mounting hole for M5 flat head screw, Ø 36 mm, height 19.5 mm	19.5 mm	36 mm	MAG-3515-B	7902086

Further accessories

Figure	Accessory	Page
	Plug connectors and cables	→ H-267
	Mounting systems	→ H-258
	Further accessories	→ H-280

F

8014939/2016-08-29

Subject to change without notice

F

NAMUR MAGNETIC PROXIMITY SENSORS IN A CYLINDRICAL HOUSING FOR EXPLOSIVE AREAS

Product description

MM NAMUR magnetic proximity sensors provide large operating distances that can reliably detect magnetic objects. Magnetic proximity sensors are resistant to dust, heat and vibration, making them ideal for use in harsh environments – even highly explosive atmospheres. By using magnetic conductors, these sensors are able to reliably detect objects over greater distances. The NAMUR design for hazardous areas is available in MM12 and MM18 designs.

At a glance

- Types: M12 to M18
- Sensing range: up to 120 mm
- Electrical configuration: NAMUR
- Enclosure rating: IP 67
- Temperature range: –25 °C to +70 °C
- Nickel-plated brass housing; plastic sensing face
- Reliable detection of permanent magnets through non-ferromagnetic materials such as stainless steel, aluminum, plastic or wood
- NAMUR design for usage in explosion-hazardous areas

Your benefits

- NAMUR version ensures safe function in explosion-hazardous areas
- Non-contact operation eliminates interference from dirt, dust and vibrations, increasing sensor life and reducing maintenance costs
- Large sensing ranges ensure reliable switching, even with target position tolerances
- Universal use since detection through other objects, such as plastic walls or non-magnetic stainless steel walls, is also possible

F

Additional information

Detailed technical data F-241
Ordering information F-242
Dimensional drawings F-242
Connection diagram. F-243
Maximum sensing range F-243
Installation notes F-244
Recommended accessories F-245

➜ www.sick.com/MM_Namur

For more information, simply enter the link or scan the QR code and get direct access to technical data, CAD design models, operating instructions, software, application examples, and much more.

8014939/2016-08-29
Subject to change without notice

Detailed technical data

Features

	MM12 NAMUR	MM18 NAMUR
Housing	Cylindrical thread design	
Thread size	M12 x 1	M18 x 1
Sensing range S_n [1]	60 mm / 90 mm (depending on type)	70 mm / 120 mm (depending on type)
Safe sensing range S_a	48.6 mm / 72.9 mm (depending on type)	56.7 mm / 97.2 mm (depending on type)
Magnetic sensitivity	≤ 1 mT / ≤ 0.6 mT (depending on type)	0.7 mT / ≤ 0.4 mT (depending on type)
Switching frequency	5,000 Hz	
Output type	NAMUR	
Output characteristic	According NAMUR EN 60947-5-6. Using of isolated switch amplifier with certificates of conformity for explosion areas is recommended(U ≤ 20 V, I ≤ 60 mA, P ≤ 100 mW)	
Magnetic alignment	Axial	
Enclosure rating [2]	IP 67	

[1] Sensing range based on installation in non-magnetic material using Magnet MAG-3010-B (M4.0)

[2] According to EN 60529.

Mechanics/electronics

	MM12 NAMUR	MM18 NAMUR
Ripple [1]	≤ 5 %	
Time delay before availability	≤ 2 ms	
Hysteresis	1 % ... 10 %	
Repeatability [2]	≤ 1 %	
Temperature drift (of S_r)	± 10 %	
EMC	According to EN 60947-5-2	
Current consumption, sensor is activated	≥ 2.5 mA	
Current consumption, sensor is not activated	≤ 1 mA	
Connection type	Male connector, M12 Cable, 2 m, PVC [3] Cable with male connector, 0.8 m, PUR (depending on type)	Male connector, M12 Cable, 2 m, PVC [3] (depending on type)
Wire-break protection	✔	
Short-circuit protection	✔	
Reverse polarity protection	✔	
Shock and vibration resistance	30 g, 11 ms / 10 ... 55 Hz, 1 mm	
Ambient operating temperature	–25 °C ... +70 °C	
Housing material	Nickel-plated brass	Nickel-plated brass / Stainless steel V4A (1.4404, 316L) (depending on type)
Tightening torque, max.	≤ 7 Nm	≤ 25 Nm
Items supplied	Fastening nuts (2 x)	
EC Approval Certificate	TÜV 99 ATEX 1398	
ATEX marking	EX II 2G Ex ib IIC T6 Gb Ta: - 25 °C ... + 70 °C	
Ex area category	2G	
Input voltage U_i max. [4]	16 V	
Input power P_i max. [4]	100 mW	
Input current I_i max. [4]	30 mA	
Internal capacitance C_i max. [4]	15 nF	
Internal inductance L_i max. [4]	35 µH	

F

	MM12 NAMUR	MM18 NAMUR
Nominal voltage	8.2 V DC (with isolating amplifier - available accessory)	

[1] Of V_S.
[2] Von Sr (VS und Ta constant)
[3] Do not bend below 0 °C.
[4] For connection to a separately certified intrinsically safe circuit only.

Ordering information

Other models ➔ www.sick.com/MM_Namur

MM12 NAMUR

Sensing range S_n	Magnetic sensitivity	Connection	Connection diagram	Type	Part no.
≤ 60 mm	≤ 1 mT	M12, 4-pin male connector	Cd-015	MM12-60A-N-ZC0	7900287
		Cable, 2-wire, 2 m, PVC	Cd-012	MM12-60A-N-ZW0	7900286
≤ 90 mm	≤ 0,6 mT	Cable with connector M9, 5-pin, with knurled nuts, 0.8 m, PUR	Cd-012	MM12-90A-N-ZUD	1046761

MM18 NAMUR

Sensing range S_n	Magnetic sensitivity	Connection	Connection diagram	Type	Part no.
≤ 70 mm	≤ 0,7 mT	M12, 4-pin male connector	Cd-015	MM18-70A-N-ZC0	7900289
		Cable, 2-wire, 2 m, PVC	Cd-012	MM18-70A-N-ZW0	7900288
≤ 120 mm	≤ 0,4 mT	M12, 4-pin male connector	Cd-015	MM18-00A-N-ZC0	1026614

Dimensional drawings (Dimensions in mm (inch))

MM12 Namur, connector

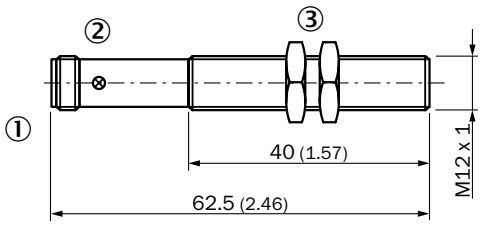

① Connection
② Indication LED
③ Fastening nuts (2x); width across 17, metal

MM12 Namur, cable

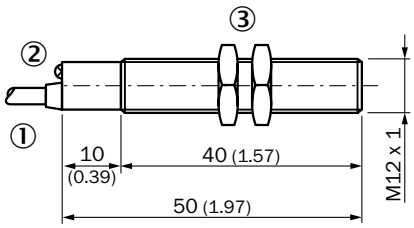

① Connection
② Indication LED
③ Fastening nuts (2x); width across 17, metal

MM18 Namur, connector

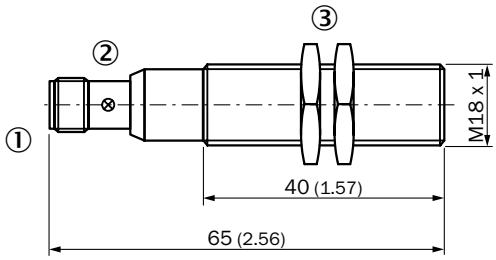

① Connection
② Indication LED
③ Fastening nuts (2x); width across 17, metal

MM18 Namur, cable

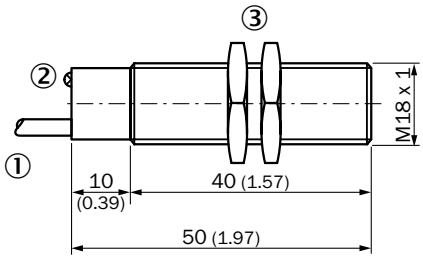

① Connection
② Indication LED
③ Fastening nuts (2x); width across 17, metal

Connection diagram

Cd-012

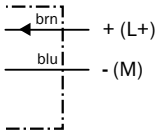

Cd-015

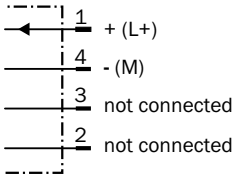

Maximum sensing range

MMxx-60Axx-xxx

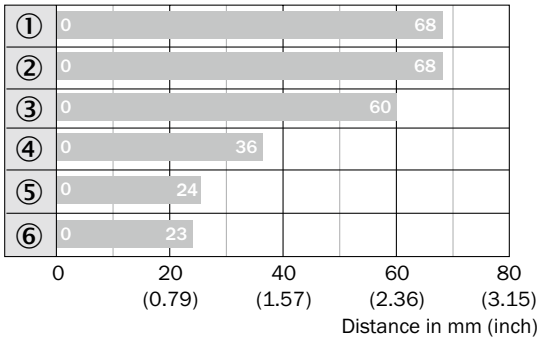

Max. sensing range S_n, flush or non-flush installation, non-magnetizable material

Magnet type	Part no.
① MAG-3315-B (M 5.1)	7902086
② MAG-3015-B (M 5.0)	7901786
③ MAG-3010-B (M 4.0)	7901785
④ MAG-2006-B (M 3.0)	7901784
⑤ MAG-0625-A (M 2.0)	7901783
⑥ MAG-1003-S (M 1.0)	7901782

MMxx-90Axx-xxx

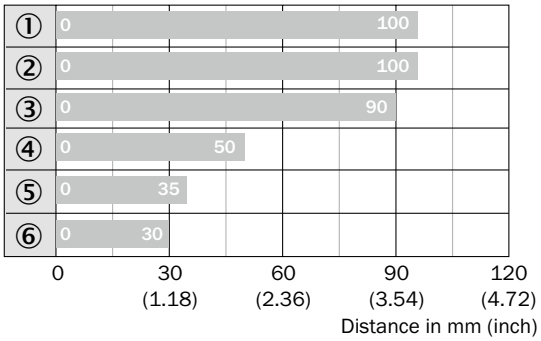

Max. sensing range S_n, flush or non-flush installation, non-magnetizable material

Magnet type	Part no.
① MAG-3315-B (M 5.1)	7902086
② MAG-3015-B (M 5.0)	7901786
③ MAG-3010-B (M 4.0)	7901785
④ MAG-2006-B (M 3.0)	7901784
⑤ MAG-0625-A (M 2.0)	7901783
⑥ MAG-1003-S (M 1.0)	7901782

F

MMxx-70Axx-xxx

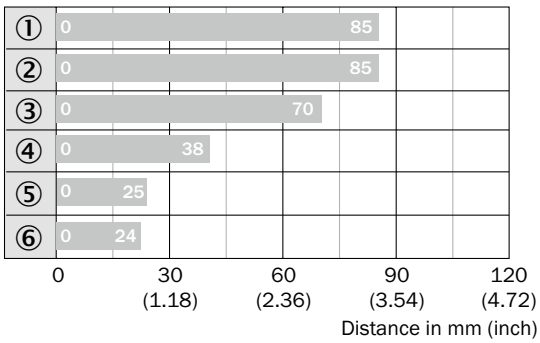

Max. sensing range S_n, flush or non-flush installation, non-magnetizable material

Magnet type	Part no.
① MAG-3315-B (M 5.1)	7902086
② MAG-3015-B (M 5.0)	7901786
③ MAG-3010-B (M 4.0)	7901785
④ MAG-2006-B (M 3.0)	7901784
⑤ MAG-0625-A (M 2.0)	7901783
⑥ MAG-1003-S (M 1.0)	7901782

MMxx-00Axx-xxx

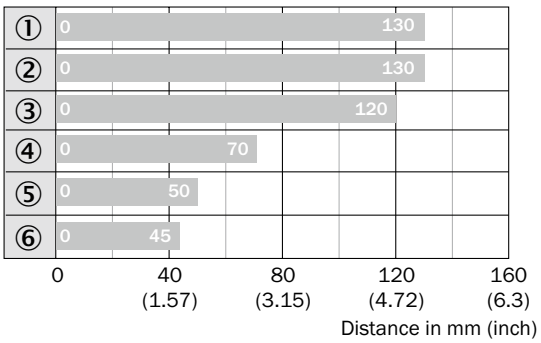

Max. sensing range S_n, flush or non-flush installation, non-magnetizable material

Magnet type	Part no.
① MAG-3315-B (M 5.1)	7902086
② MAG-3015-B (M 5.0)	7901786
③ MAG-3010-B (M 4.0)	7901785
④ MAG-2006-B (M 3.0)	7901784
⑤ MAG-0625-A (M 2.0)	7901783
⑥ MAG-1003-S (M 1.0)	7901782

Installation notes

Flush sensor installation

Magnetic proximity sensors can be installed flush in all materials and metals with affecting the sensing range with the exception of magnetizable materials.

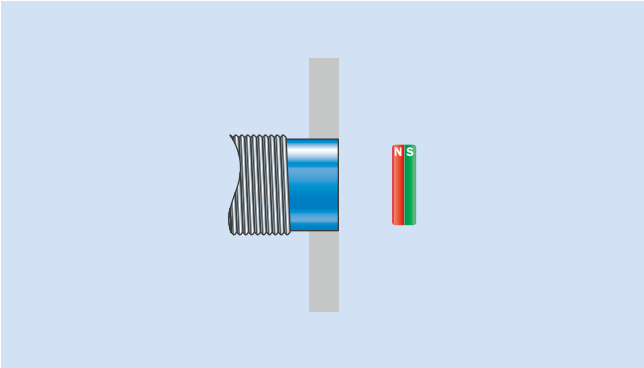

Non-flush sensor installation

The table shows how much the proximity sensor must protrude when installed in magnetic materials to prevent a reduction in the sensing range by more than 5%. Measurement standard MAG-3010-B (M 4.0).

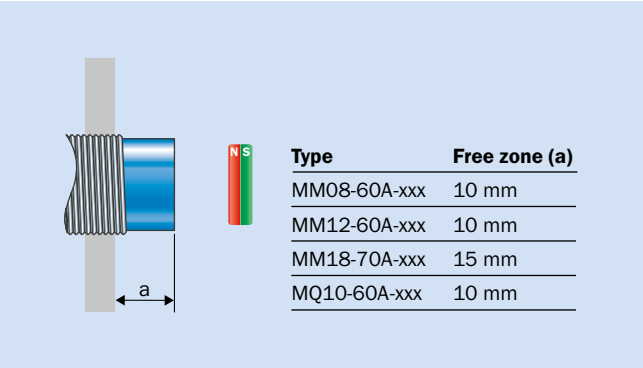

Type	Free zone (a)
MM08-60A-xxx	10 mm
MM12-60A-xxx	10 mm
MM18-70A-xxx	15 mm
MQ10-60A-xxx	10 mm

F

Recommended accessories

Magnets

Figure	Description	Dimensions	Diameter	Type	Part no.
	Magnet without mounting hole, Ø 6 mm, height 25 mm	25 mm	6 mm	MAG-0625-A	7901783
	Magnet without mounting hole, Ø 10 mm, height 3 mm	3 mm	10 mm	MAG-1003-S	7901782
	Magnet without mounting hole, Ø 30 mm, height 10 mm	10 mm	30 mm	MAG-3010-B	7901785
	Magnet with mounting hole for M4 counter-sunk screw, Ø 20 mm, height 6.5 mm	6.5 mm	20 mm	MAG-2006-B	7901784
	Magnet with mounting hole for M5 flat head screw, Ø 31 mm, height 15 mm	15 mm	31 mm	MAG-3015-B	7901786
	Magnet with mounting hole for M5 flat head screw, Ø 36 mm, height 19.5 mm	19.5 mm	36 mm	MAG-3515-B	7902086

Power supply modules

Power supply modules

Figure	Brief description	Type	Part no.
	NAMUR isolatig amplifier, Cable fault detection, Switching outputs: 2 NO relay (1 per channel), Supply voltage: 24 V ... 230 V, Voltage type: AC/DC	EN2-2EX1	6041096
	NAMUR isolatig amplifier, Cable fault detection, Switching outputs: 2 NO relay (1 per channel), Supply voltage: 19,2 V ... 30 V, Voltage type: DC	EN2-2EX3	6041095

Further accessories

Figure	Accessory	Page
	Plug connectors and cables	→ H-267
	Mounting systems	→ H-258
	Further accessories	→ H-280

F

MAGNETIC PROXIMITY SENSORS IN A RECTANGULAR HOUSING

Product description

The MQ magnetic proximity sensors reliably detect permanent magnets through non-magnetic materials such as stainless steel, aluminum, plastic or wood. The MQ sensors feature a square, compact plastic housing that makes them easy to install. These sensors are resistant to dust, heat and vibration, making them ideal for use in harsh environments.

At a glance

- Type: 10 mm x 28 mm x 16 mm
- Sensing ranges: up to 60 mm
- Electrical configuration: DC, 3-wire
- Enclosure rating: IP 67, IP 68
- Temperature range: –25 °C to +75 °C
- Tough VISTAL™ housing
- Reliable detection of permanent magnets through non-ferromagnetic materials such as stainless steel, aluminum, plastic or wood
- Solves high-temperature applications by installing the permanent magnet in the high-temperature area and the sensor behind an insulated area

Your benefits

- Short-circuit protection (pulsed)
- Large sensing ranges ensure reliable switching, even with target position tolerances
- Low-cost sensor solution saves installation time and costs
- Compact plastic housing makes machine integration easy

F

Additional information

Detailed technical data F-247
Ordering information F-248
Dimensional drawings F-248
Connection diagram. F-248
Maximum sensing range F-248
Installation notes F-249
Recommended accessories F-249

➜ www.sick.com/MQ

For more information, simply enter the link or scan the QR code and get direct access to technical data, CAD design models, operating instructions, software, application examples, and much more.

8014939/2016-08-29
Subject to change without notice

Detailed technical data

Features

Housing	Rectangular
Dimensions (W x H x D)	10 mm x 16 mm x 28 mm
Sensing range S_n [1]	0 mm ... 60 mm
Safe sensing range S_a	48.6 mm
Magnetic sensitivity	≤ 1 mT
Switching frequency	1,000 Hz
Output type	PNP / NPN (depending on type)
Output function	NO
Electrical wiring	DC 3-wire
Enclosure rating [2]	IP 67, IP 68

[1] Sensing range based on installation in non-magnetic material using Magnet MAG-3010-B (M4.0)
[2] According to EN 60529.

Mechanics/electronics

Supply voltage	10 V DC ... 30 V DC
Ripple [1]	≤ 10 %
Voltage drop [2]	≤ 1.5 V
Current consumption [3]	≤ 5 mA
Time delay before availability	≤ 26 ms
Hysteresis	1 % ... 10 %
Repeatability [4]	≤ 1 %
Temperature drift (of S_r)	± 10 %
EMC	According to EN 60947-5-2
Continuous current I_a	≤ 200 mA
Connection type	Male connector, M8 Cable, 2 m, PUR/PVC [5] Cable with male connector, M12, 1 m, PUR/PVC [5] (depending on type)
Short-circuit protection	✔
Reverse polarity protection	✔
Power-up pulse protection	✔
Shock and vibration resistance	30 g, 11 ms / 10 ... 55 Hz, 1 mm
Ambient operating temperature	–25 °C ... +75 °C
Housing material	VISTAL™
Sensing face material	Plastic, VISTAL™

[1] Of V_S.
[2] At I_a max.
[3] Without load.
[4] Von Sr (VS und Ta constant)
[5] Do not bend below 0 °C.

F

Ordering information

Other models ➔ www.sick.com/MQ

Sensing range S_n	Output function	Output type	Connection	Connection diagram	Type	Part no.
≤ 60 mm	NO	PNP	Connector M8, 3-pin	Cd-002	MQ10-60APSKT0	1078008
			Cable, 3-wire, 2 m, PUR/PVC	Cd-001	MQ10-60APSKU0	1078006
			Cable with connector M12, 3-pin, 1 m, PUR/PVC	Cd-002	MQ10-60AP-SKQDS01	1078005
		NPN	Connector M8, 3-pin	Cd-002	MQ10-60ANSKT0	1078009
			Cable, 3-wire, 2 m, PUR/PVC	Cd-001	MQ10-60ANSKU0	1078007

Dimensional drawings (Dimensions in mm (inch))

MQ10, connector

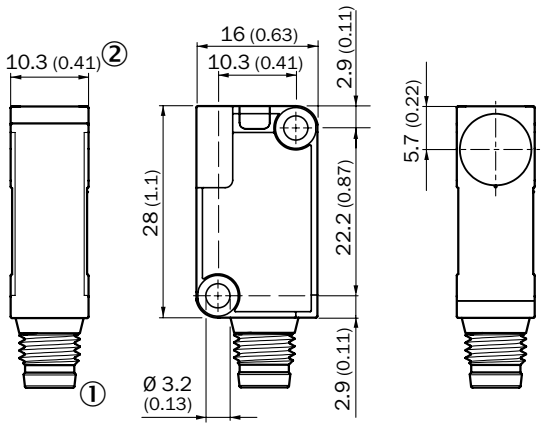

① Connection
② LED indicator 270°

MQ10, cable

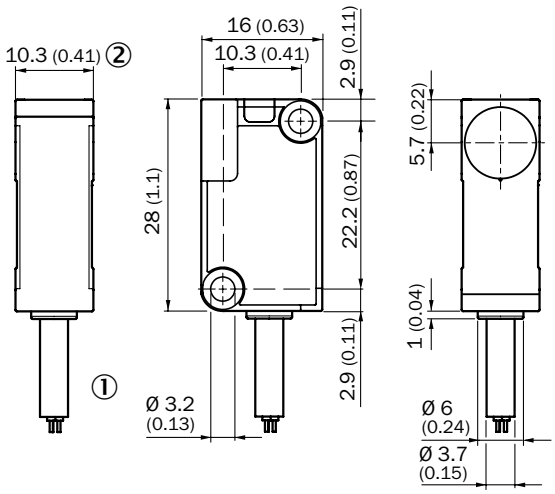

① Connection
② LED indicator 270°

F

Connection diagram

Cd-001

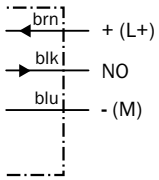

Cd-002

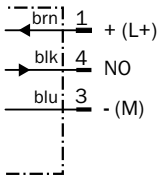

Maximum sensing range

MMxx-60Axx-xxx

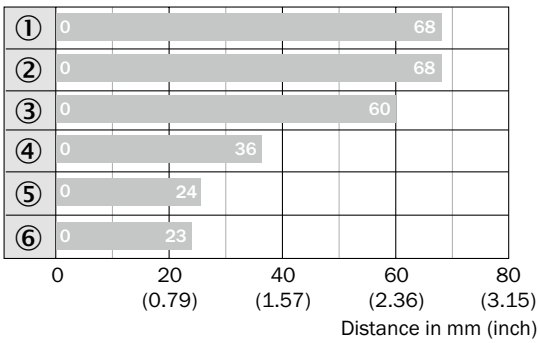

Max. sensing range S_n, flush or non-flush installation, non-magnetizable material

Magnet type	Part no.
① MAG-3315-B (M 5.1)	7902086
② MAG-3015-B (M 5.0)	7901786
③ MAG-3010-B (M 4.0)	7901785
④ MAG-2006-B (M 3.0)	7901784
⑤ MAG-0625-A (M 2.0)	7901783
⑥ MAG-1003-S (M 1.0)	7901782

8014939/2016-08-29
Subject to change without notice

Installation notes

Flush sensor installation

Magnetic proximity sensors can be installed flush in all materials and metals with affecting the sensing range with the exception of magnetizable materials.

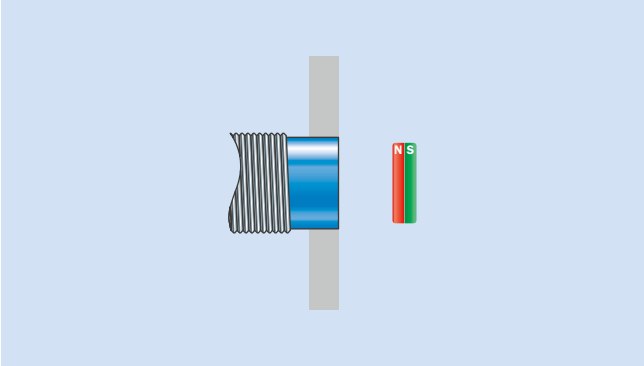

Non-flush sensor installation

The table shows how much the proximity sensor must protrude when installed in magnetic materials to prevent a reduction in the sensing range by more than 5%. Measurement standard MAG-3010-B (M 4.0).

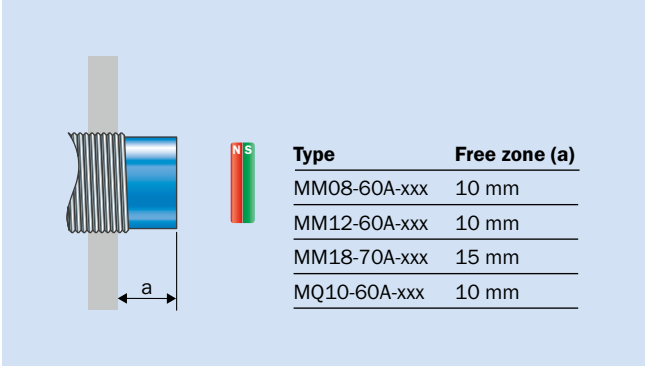

Type	Free zone (a)
MM08-60A-xxx	10 mm
MM12-60A-xxx	10 mm
MM18-70A-xxx	15 mm
MQ10-60A-xxx	10 mm

Recommended accessories

Magnets

Figure	Description	Dimensions	Diameter	Type	Part no.
	Magnet without mounting hole, Ø 6 mm, height 25 mm	25 mm	6 mm	MAG-0625-A	7901783
	Magnet without mounting hole, Ø 10 mm, height 3 mm	3 mm	10 mm	MAG-1003-S	7901782
	Magnet without mounting hole, Ø 30 mm, height 10 mm	10 mm	30 mm	MAG-3010-B	7901785
	Magnet with mounting hole for M4 countersunk screw, Ø 20 mm, height 6.5 mm	6.5 mm	20 mm	MAG-2006-B	7901784
	Magnet with mounting hole for M5 flat head screw, Ø 31 mm, height 15 mm	15 mm	31 mm	MAG-3015-B	7901786
	Magnet with mounting hole for M5 flat head screw, Ø 36 mm, height 19.5 mm	19.5 mm	36 mm	MAG-3515-B	7902086

Further accessories

Figure	Accessory	Page
	Plug connectors and cables	➜ H-267
	Mounting systems	➜ H-258
	Further accessories	➜ H-280

F

YOUR ORDER, PLEASE! CUSTOMIZABLE SOLUTIONS TO FIT YOUR NEEDS.

If you don't find the proximity sensor in the SICK portfolio that meets your requirements, we can develop a sensor based on your specifications that fits your application.

G

Even with a wide range of standard offerings for proximity sensors, individual and customized solutions are sometimes required to meet the specific requirements and application conditions in the automation industry. The dialog with our specialists for customized development begins here.

Whether small, but crucial adaptations to our standard components or comprehensive developments are required, our experts will find the optimal solution. We guarantee a structured project workflow from the start.

8014939/2016-08-29
Subject to change without notice

TAILORED SOLUTIONS

Design to implementation of a tailored solution is divided into three areas and six phases.
During each phase of the project, you can rely on our support and expertise – anywhere in the world.

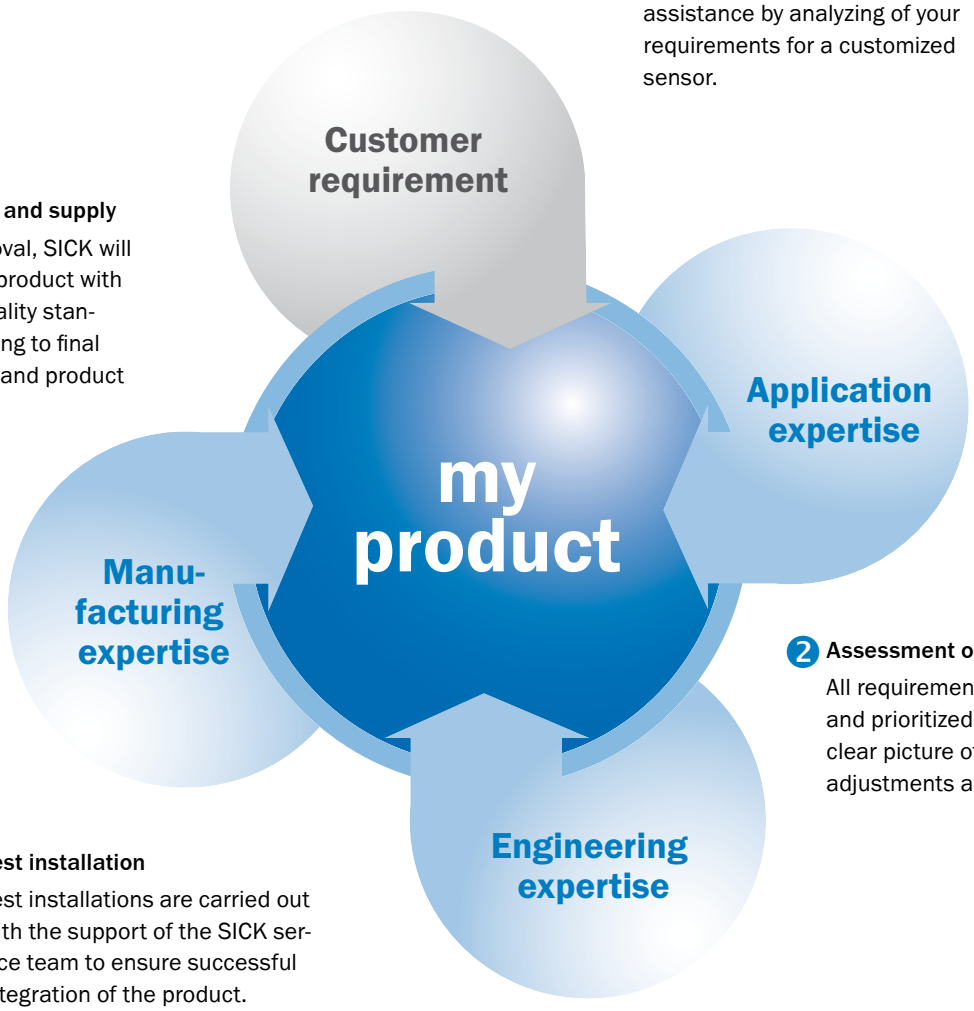

1 Application analysis
SICK provides you with onsite assistance by analyzing of your requirements for a customized sensor.

2 Assessment of requirements
All requirements are assessed and prioritized to produce a clear picture of which product adjustments are necessary.

3 Drawing up a specification
We work with you to draw up the specifications for your customized solution.

4 Prototyping
SICK can use the specifications to produce a fully functional prototype sensor.

5 Test installation
Test installations are carried out with the support of the SICK service team to ensure successful integration of the product.

6 Production and supply
Upon approval, SICK will supply the product with all SICK quality standards relating to final production and product quality.

G

CUSTOMIZABLE SOLUTIONS TO FIT YOUR NEEDS

SICK is on your side as an innovative, reliable and competent partner in evaluating and assessing all application requirements. After determining the necessary the necessary product adjustments, we define the specification for your customized solution in collaboration with you.

Compile your “wish list” from the following components:

CONNECTION

- M5
- M8
- M12
- Special connector

HOUSING

- Form and design
- Dimensions
- Material
- Integrated assembly concept

ACTIVE AREA

- Sensing range
- Hysteresis
- Switch on delay
- Temperature range

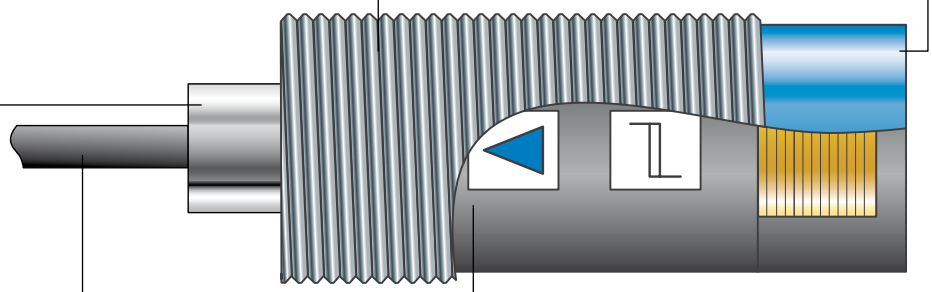

G

CABLE

- Length
- Material
- Special features (e.g., oil resistant)

ELECTRONICS

- Output type (NPN/PNP)
- 2-, 3- and 4-wire
- Normally open / normally closed
- Intelligent switching

ONSITE MOUNTING

- Customized mounting concept for quick and easy installation of the sensor onsite

my product

Your contacts at SICK are happy to advise you.

8014939/2016-08-29
Subject to change without notice

G

ACCESSORIES

Perfect sensor integration made easy

Innovative sensor technology is only one side of the coin when talking about intelligent automation solutions. The picture is completed by matching accessories for professional and cost-effective integration. Whether electrical connection technology or mechanical mounting systems, only the right integrative system products lead to a high quality, highly available application solution. The advantage? Sensors and accessories work in conjunction to offer maximum operational safety.
In addition, the user is able to save additional costs for development, manufacture and procurement. A wide range of accessory components are always available on short-notice – convenient single-source availability in combination with sensors. And in the event that a custom solution is required, SICK is on your side as a reliable and competent partner. Tailored developments and adaptations can be implemented in just a short period of time.

8014939/2016-08-29
Subject to change without notice

General information H-256

Mounting systems H-258

Magnets H-266

Connection systems H-267

Modules and gateways. H-280

H

MOUNTING SYSTEMS AND CONNECTIVITY

Mounting systems

To integrate SICK sensors perfectly into a machine or system, mounting equipment tailored precisely to the sensors is required. Whether fine adjustment to precision equipment or protection against harsh environmental conditions, SICK provides matching designs and products for mounting, alignment, and protection for its sensors. When it comes to special applications, SICK works with the customer to develop tailored and system-specific mounting elements, which are then delivered with the sensor.

Your benefits

- Quick system installation and maintenance thanks to a broad portfolio of simple, practical mounting options tailored to SICK sensors
- Flexible, customized alignment of the sensor to the object being detected using the universal clamp system
- Prevention of sensor damage (e.g. due to mechanical loads) and guarantee of sensor functionality with the aid of SICK sensor protection solutions
- Application-specific solutions for mounting, aligning, and protecting sensors

8014939/2016-08-29
Subject to change without notice

Passive connectivity

A broad portfolio of termination screw male and female connectors allows customized wiring solutions to be implemented. Depending on the requirements, SICK offers different lengths of cable and materials that are delivered quickly and pre-assembled free of errors. Connecting cables (with a molded round connector at one end and open at the other end) offer maximum flexibility when wiring sensors.

Your benefits

- Operational safety because the connectivity is designed for the sensors
- Low costs thanks to high-quality components with long service lives
- Guaranteed productivity thanks to reliable detection
- Ready to assemble plug connectors with screw connection or insulation piercing
- Broad portfolio of connecting and extension cables with PUR jacket (high resistance to oils, lubricants, and coolants), PVC jacket (good resistance to chemicals for use in dry zones), and for use in hygienic and washdown zones (maximum resistance to chemicals, acids, alkalis, and cleaning agents)

Mounting systems

Universal bar clamp systems

Figure	Description	Material	Type	Part no.
	Plate H for universal clamp bracket	Steel, zinc coated	BEF-KHS-H01	2022465
	Plate N05 for universal clamp bracket, M12	Zinc plated steel (sheet), Zinc die cast (clamping bracket)	BEF-KHS-N05	2051611
		Stainless steel 1.4571 (sheet), Stainless steel 1.4408 (clamp)	BEF-KHS-N05N	2051621
	Plate N06 for universal clamp bracket, M18	Zinc plated steel (sheet), Zinc die cast (clamping bracket)	BEF-KHS-N06	2051612
		Stainless steel 1.4571 (sheet), Stainless steel 1.4408 (clamp)	BEF-KHS-N06N	2051622
	Plate N10 for universal clamp bracket, M30	Zinc plated steel (sheet), Zinc die cast (clamping bracket)	BEF-KHS-N10	2062372
		Stainless steel 1.4571 (sheet), Stainless steel 1.4408 (clamp)	BEF-KHS-N10N	2062373
	Plate N11N for universal clamp bracket	Stainless steel 1.4571 (sheet), Stainless steel 1.4408 (clamp)	BEF-KHS-N11N	2071081
	Universal bar clamp for mounting bars with 12 mm diameter	Zinc diecast	BEF-KHS-KH3	5322626
	Universal clamp bracket for mounting bars with 12 mm diameter	Stainless steel V2A (1.4301)	BEF-KHS-KH3N	5322627
	Mounting bar, straight, 200 mm	Steel, zinc coated	BEF-MS12G-A	4056054
		Stainless steel (1.4571)	BEF-MS12G-NA	4058914
	Mounting bar, straight, 300 mm	Steel, zinc coated	BEF-MS12G-B	4056055
		Stainless steel (1.4571)	BEF-MS12G-NB	4058915
	Mounting bar, L-shaped, 150 mm x 150 mm	Steel, zinc coated	BEF-MS12L-A	4056052
		Stainless steel (1.4571)	BEF-MS12L-NA	4058912
	Mounting bar, L-shaped, 250 x 250 mm	Steel, zinc coated	BEF-MS12L-B	4056053
		Stainless steel (1.4571)	BEF-MS12L-NB	4058913
	Mounting bar, Z-shaped, 150 mm x 70 mm x 150 mm	Steel, zinc coated	BEF-MS12Z-A	4056056
		Stainless steel (1.4571)	BEF-MS12Z-NA	4058916
	Mounting bar, Z-shaped, 150 mm x 70 mm x 250 mm	Steel, zinc coated	BEF-MS12Z-B	4056057
		Stainless steel (1.4571)	BEF-MS12Z-NB	4058917
	Bar clamp for bar diameter of 12 mm (fixing the mounting rod)	Aluminum	BEF-RMC-D12	5321878

→ For dimensional drawings, please see page H-260

H

Mounting brackets and mounting plates

Figure	Description	Material	Type	Part no.
	Mounting plate for M8 housing	Steel, zinc coated	BEF-WG-M08	5321722
	Mounting bracket for M8 housing	Steel, zinc coated	BEF-WN-M08	5321721

Figure	Description	Material	Type	Part no.
	Mounting plate for M12 housing	Steel, zinc coated	BEF-WG-M12	5321869
		Stainless steel	BEF-WG-M12N	5320950
	Mounting bracket for M12 housing	Steel, zinc coated	BEF-WN-M12	5308447
		Stainless steel	BEF-WN-M12N	5320949
	Mounting plate for M18 housing	Steel, zinc coated	BEF-WG-M18	5321870
		Stainless steel	BEF-WG-M18N	5320948
	Mounting bracket for M18 housing	Steel, zinc coated	BEF-WN-M18	5308446
		Stainless steel	BEF-WN-M18N	5320947
	Mounting plate for M30 housing	Steel, zinc coated	BEF-WG-M30	5321871
	Mounting bracket for M30 housing	Steel, zinc coated	BEF-WN-M30	5308445
	Mounting bracket for wall mounting for capacitive proximity sensor CQ4	Stainless steel 1.4571	BEF-W4-A	2051628
	Mounting bracket for floor mounting for capacitive proximity sensor CQ4	Stainless steel 1.4571	BEF-W4-B	2051630

→ For dimensional drawings, please see page H-262

Terminal and alignment brackets

Alignment brackets

Figure	Description	Material	Type	Part no.
	Integrated adapter for M30 housings	Plastic (POM)	BEF-EA-CM30	2043770
	Ball clamp bracket	Plastic	BEF-GH-MINI01	2023160
	Mounting bracket with ball-and-socket for M18 housing	Plastic	BEF-WN-M18-ST02	5312973

H

Terminal brackets

Figure	Description	Material	Type	Part no.
	Clamping block for round sensors M8, without fixed stop	Plastic (PA12), glass-fiber reinforced	BEF-KH-M08	2051477
	Clamping block for round sensors M8, with fixed stop	Plastic (PA12), glass-fiber reinforced	BEF-KHF-M08	2051478
	Clamping block for round sensors M12, without fixed stop	Plastic (PA12), glass-fiber reinforced	BEF-KH-M12	2051479
	Clamping block for round sensors M12, with fixed stop	Plastic (PA12), glass-fiber reinforced	BEF-KHF-M12	2051480
	Clamping block for round sensors M18, without fixed stop	Plastic (PA12), glass-fiber reinforced	BEF-KH-M18	2051481
	Clamping block for round sensors M18, with fixed stop	Plastic (PA12), glass-fiber reinforced	BEF-KHF-M18	2051482

➜ For dimensional drawings, please see page H-264

Other mounting accessories

Type	Part no.
O-ring IMP05	5327492
O-ring IMP08	5327493
O-ring IMP12	5327494
O-ring IMP14	5327495
Support ring IMP12	5327496

Dimensional drawings mounting systems

Universal bar clamp systems

BEF-KHS-H01

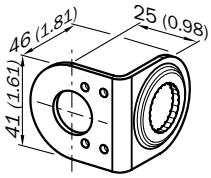

BEF-KHS-N05
BEF-KHS-N05N

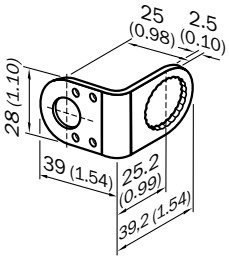

BEF-KHS-N06
BEF-KHS-N06N

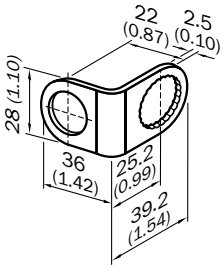

BEF-KHS-N10 / BEF-KHS-N10N

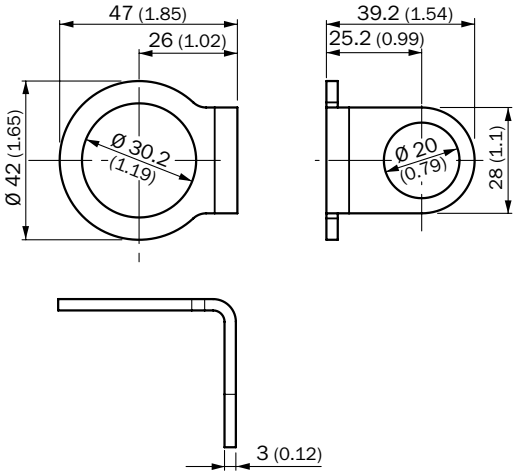

BEF-KHS-N11N

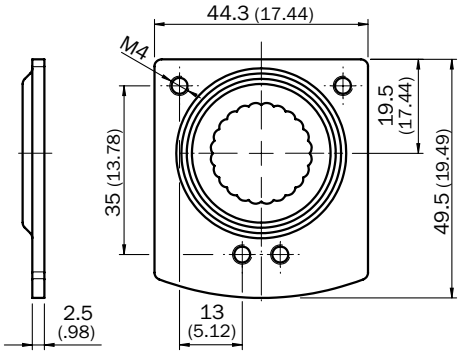

H

8014939/2016-08-29
Subject to change without notice

BEF-KHS-KH3 / BEF-KHS-KH3N

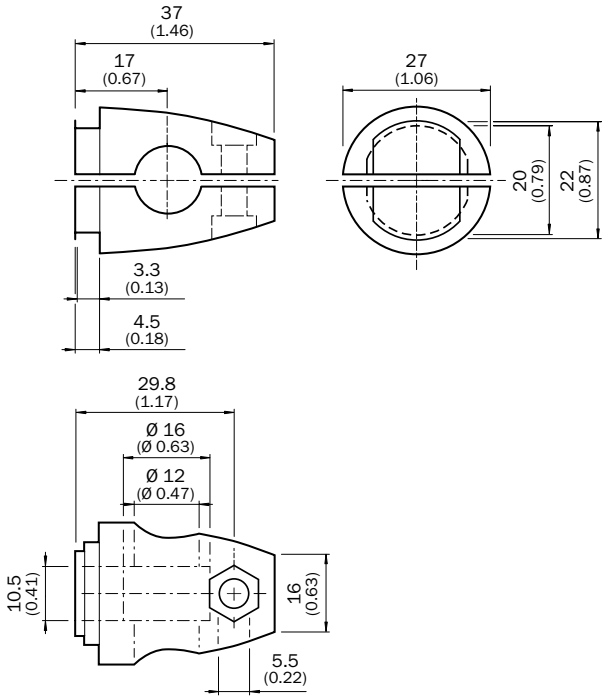

BEF-MS12G-A, BEF-MS12G-B, BEF-MS12G-NA, BEF-MS12G-NB

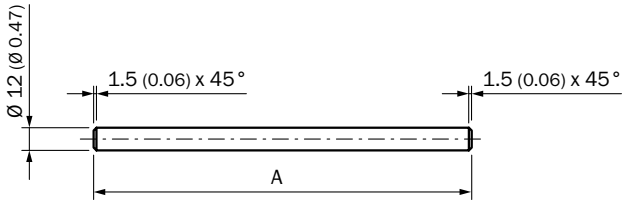

① BEF-MS12G-(N)A: A = 200 mm
② BEF-MS12G-(N)B: A = 300 mm

BEF-MS12L-A, BEF-MS12L-B, BEF-MS12L-NA, BEF-MS12L-NB

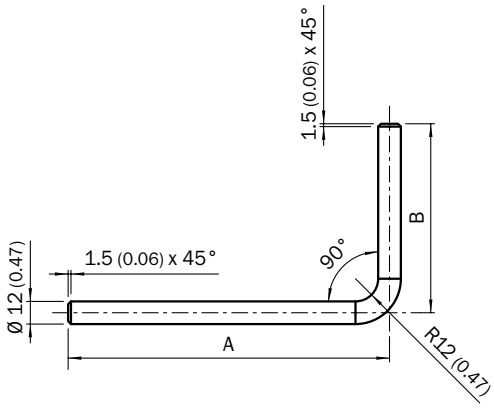

① BEF-MS12L-(N)A: A = 200 mm, B = 150 mm
② BEF-MS12L-(N)B: A = 250 mm, B = 250 mm

BEF-MS12Z-A, BEF-MS12Z-B, BEF-MS12Z-NA, BEF-MS12Z-NB

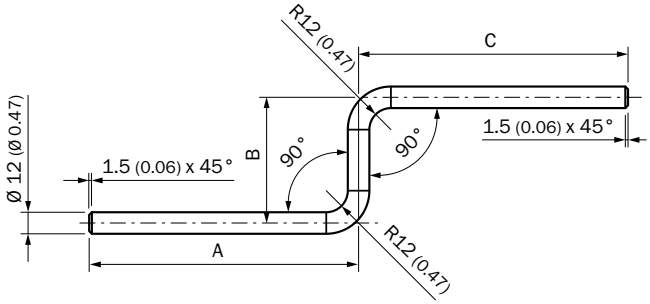

① BEF-MS12Z-(N)A: A = 150 mm, B = 70 mm, C = 150 mm
② BEF-MS12Z-(N)B: A = 150 mm, B = 70 mm, C = 250 mm

BEF-RMC-D12 (5321878)

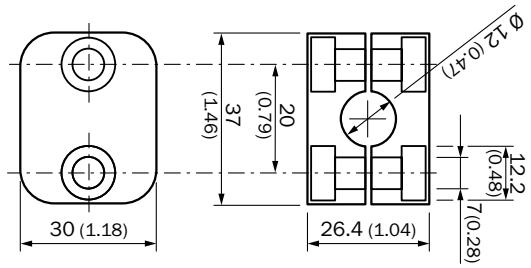

H

Mounting brackets and mounting plates

BEF-WG-M08

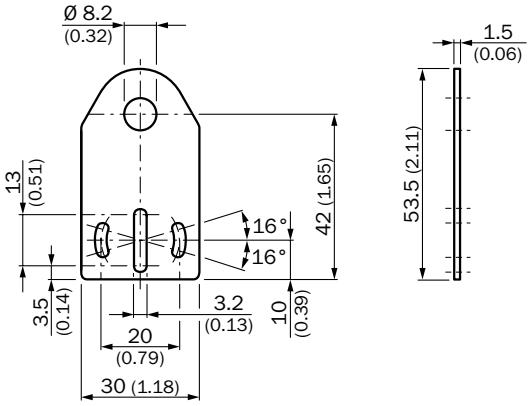

BEF-WN-M08

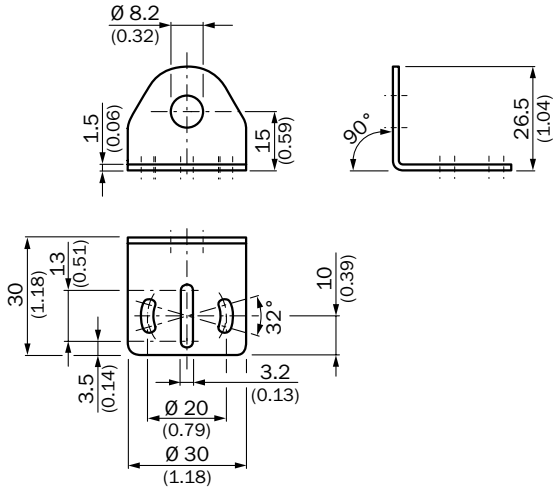

BEF-WG-M12 / BEF-WG-M12N

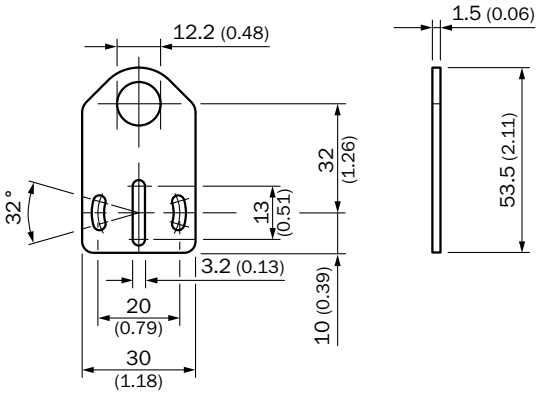

BEF-WN-M12 / BEF-WN-M12N

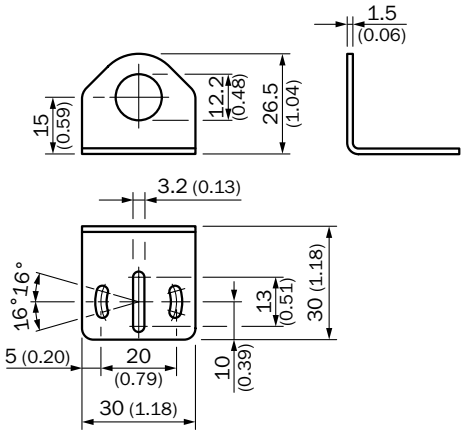

BEF-WG-M18 / BEF-WG-M18N

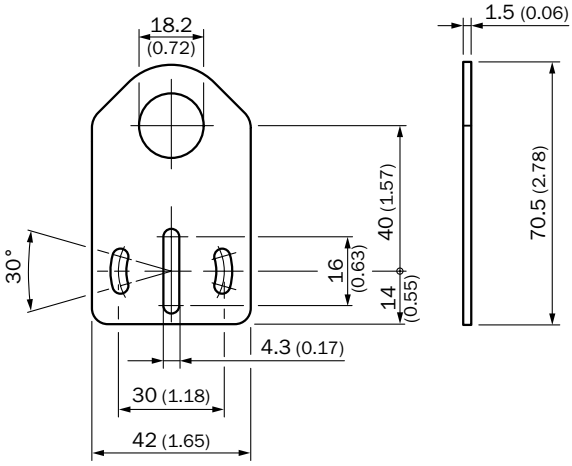

BEF-WN-M18 / BEF-WN-M18N

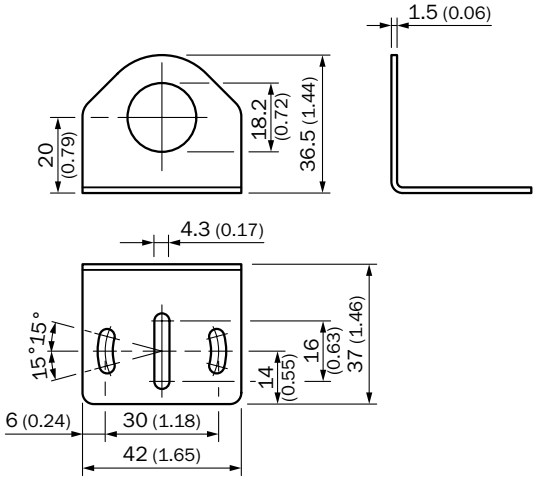

H

8014939/2016-08-29
Subject to change without notice

BEF-WG-M30

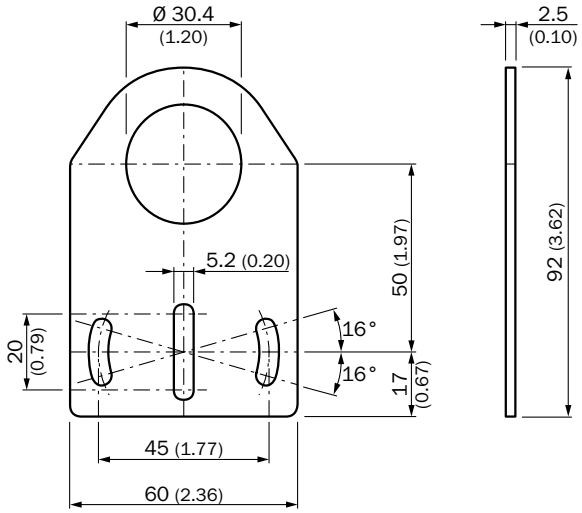

BEF-WN-M30

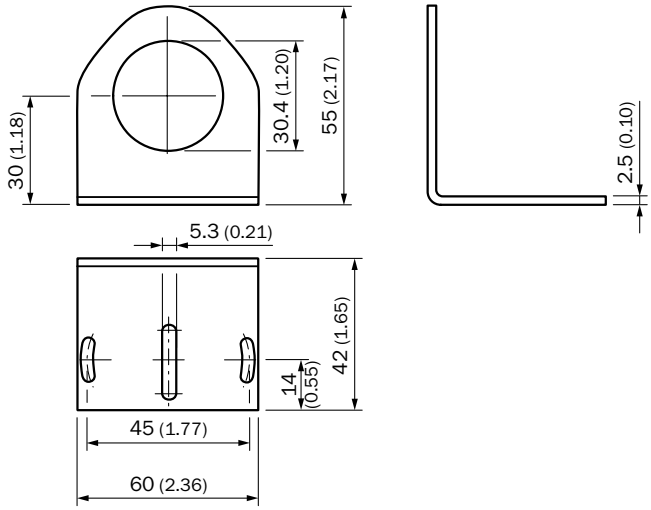

BEF-W4-A

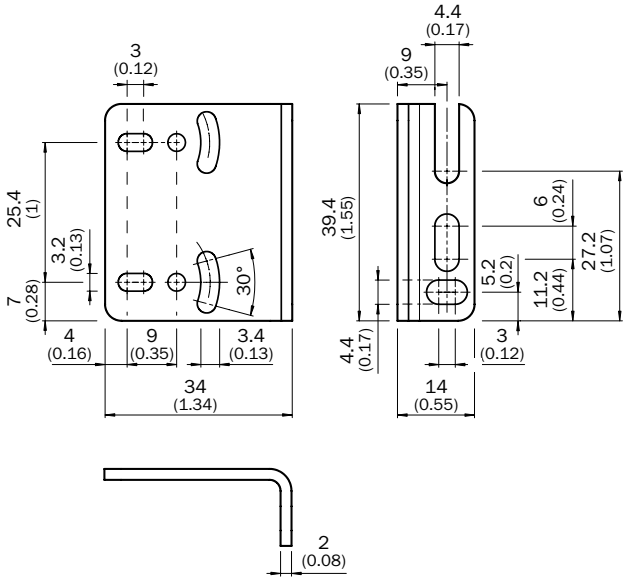

BEF-W4-B

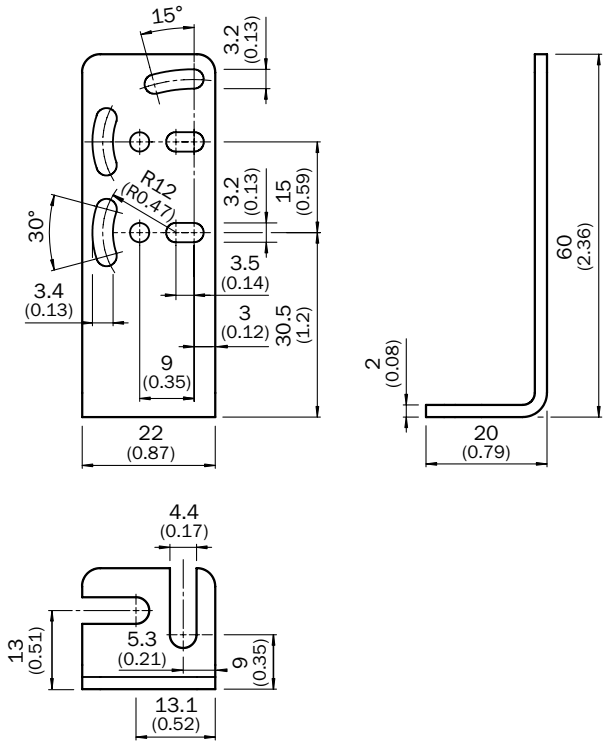

H

Terminal and alignment brackets

BEF-EA-CM30

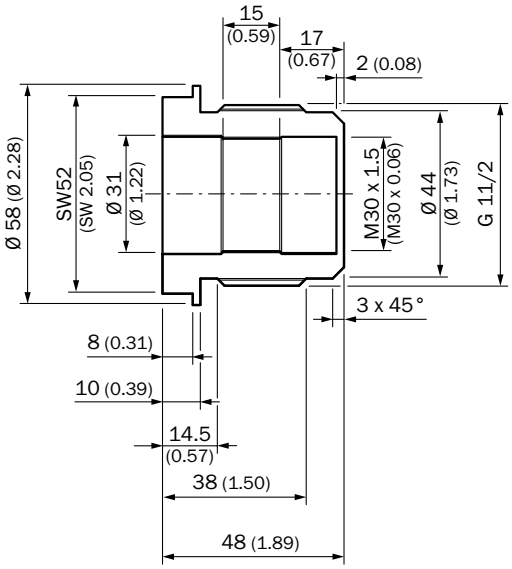

BEF-GH-MINI01

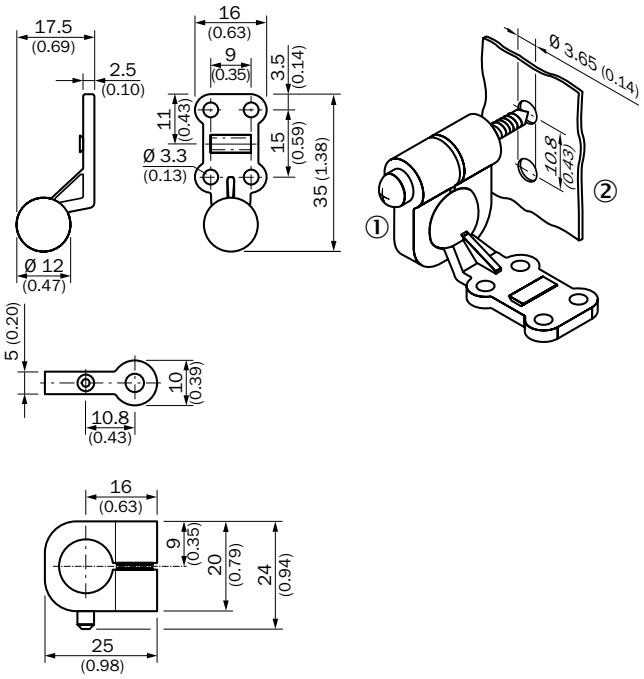

BEF-WN-M18-ST02

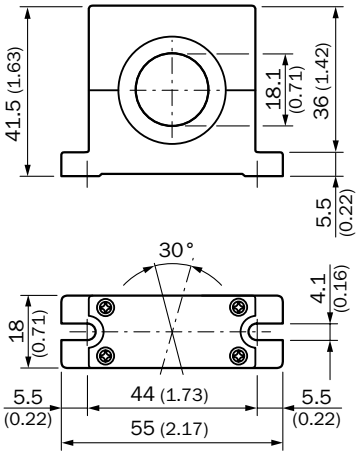

BEF-KH-M08

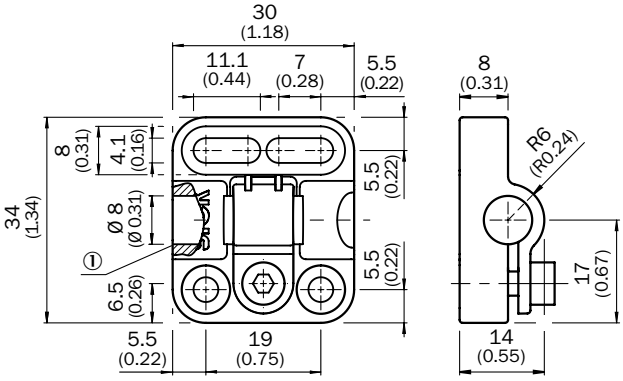

① Without fixed stop

H

8014939/2016-08-29
Subject to change without notice

BEF-KHF-M08

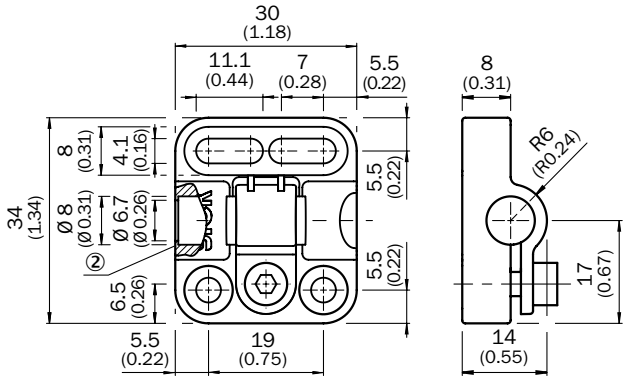

① With fixed stop

BEF-KH-M12

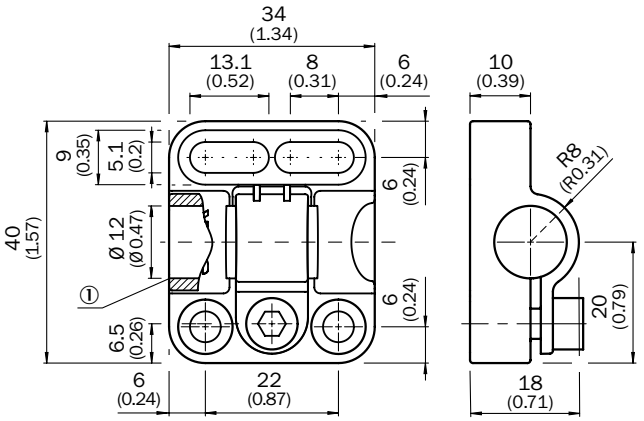

① Without fixed stop

BEF-KHF-M12

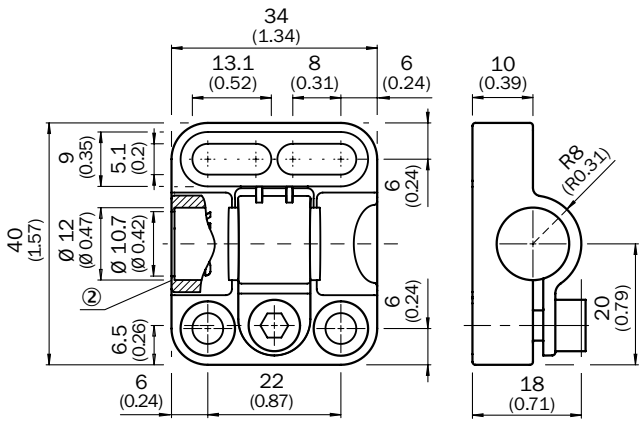

② With fixed stop

BEF-KH-M18

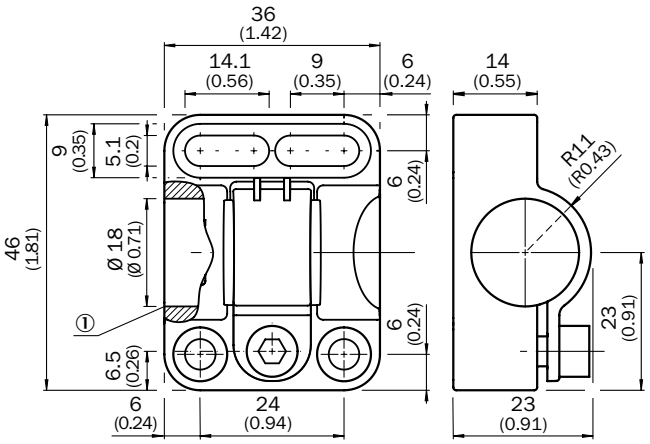

① Without fixed stop

BEF-KHF-M18

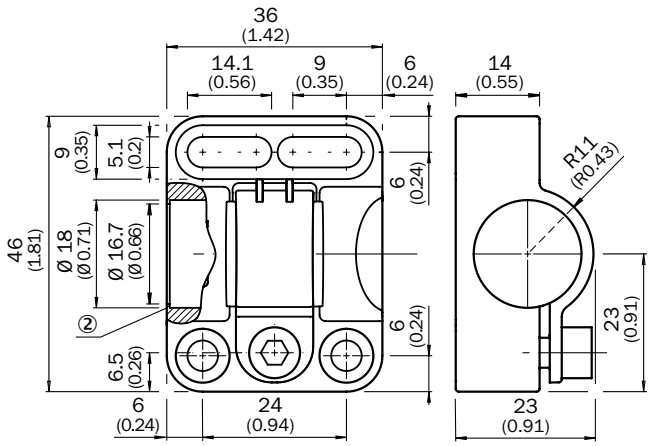

② With fixed stop

H

Magnets

Figure	Description	Dimensions	Diameter	Type	Part no.
	Magnet without mounting hole	25 mm	6 mm	MAG-0625-A	7901783
	Magnet without mounting hole	3 mm	10 mm	MAG-1003-S	7901782
	Magnet with mounting hole for M4 counter-sunk screw	6.5 mm	20 mm	MAG-2006-B	7901784
	Magnet without mounting hole	10 mm	30 mm	MAG-3010-B	7901785
	Magnet with mounting hole for M5 flat head screw	15 mm	31 mm	MAG-3015-B	7901786
	Magnet with mounting hole for M5 flat head screw	19.5 mm	36 mm	MAG-3515-B	7902086

H

Connection systems

Connecting cables with female connector

Connecting cables with female connector M8, 3-pin, PVC, chemical resistant

- **Cable material:** PVC
- **Connector material:** TPU
- **Locking nut material:** CuZn, nickel-plated brass

Figure	Connection type head A	Connection type head B	Connecting cable	Type	Part no.
	Female connector, M8, 3-pin, straight, unshielded	Cable, Flying leads	2 m, 3-wire	DOL-0803-G02M	6010785
			5 m, 3-wire	DOL-0803-G05M	6022009
			10 m, 3-wire	DOL-0803-G10M	6022011
			15 m, 3-wire	DOL-0803-G15M	6036472
	Female connector, M8, 3-pin, angled, unshielded	Cable, Flying leads	2 m, 3-wire	DOL-0803-W02M	6008489
			5 m, 3-wire	DOL-0803-W05M	6022010
			10 m, 3-wire	DOL-0803-W10M	6022012
			15 m, 3-wire	DOL-0803-W15M	6036473

Connecting cables with female connector M8, 3-pin, PUR, halogen-free, Oil / grease resistant

- **Cable material:** PUR, halogen-free
- **Connector material:** TPU
- **Locking nut material:** zinc die-cast, nickel-plated

Figure	Connection type head A	Connection type head B	Connecting cable	Type	Part no.
	Female connector, M8, 3-pin, straight, unshielded	Cable, Flying leads	1 m, 3-wire	DOL-0803-G01MC	6036455
			2 m, 3-wire	DOL-0803-G02MC	6025888
			3 m, 3-wire	DOL-0803-G03MC	6038991
			5 m, 3-wire	DOL-0803-G05MC	6025889
			10 m, 3-wire	DOL-0803-G10MC	6025890
			20 m, 3-wire	DOL-0803-G20MC	6036456
	Female connector, M8, 3-pin, angled, unshielded with LED	Cable, Flying leads	2 m, 3-wire	DOL-0803-L02MC	6039080
	Female connector, M8, 3-pin, angled, unshielded	Cable, Flying leads	2 m, 3-wire	DOL-0803-W02MC	6025891
			5 m, 3-wire	DOL-0803-W05MC	6025892
			10 m, 3-wire	DOL-0803-W10MC	6025893

Connecting cables with female connector M8, 3-pin, PP, hygienic systems

- **Cable material:** PP
- **Connector material:** PP
- **Locking nut material:** stainless steel (V4A/1.4404/316L)

Figure	Connection type head A	Connection type head B	Connecting cable	Type	Part no.
	Female connector, M8, 3-pin, straight, unshielded	Cable, Flying leads	2 m, 3-wire	DOL-0803-G02MRN	6058504
			5 m, 3-wire	DOL-0803-G05MRN	6058505
			10 m, 3-wire	DOL-0803-G10MRN	6058506
	Female connector, M8, 3-pin, angled, unshielded, with LED	Cable, Flying leads	2 m, 3-wire	DOL-0803-L02MRN	6058787
			5 m, 3-wire	DOL-0803-L05MRN	6058788
			10 m, 3-wire	DOL-0803-L10MRN	6058789
	Female connector, M8, 3-pin, angled, unshielded	Cable, Flying leads	2 m, 3-wire	DOL-0803-W02MRN	6058507
			5 m, 3-wire	DOL-0803-W05MRN	6058508
			10 m, 3-wire	DOL-0803-W10MRN	6058509

Connecting cables with female connector M12, 4-pin, PVC, chemical resistant

- **Cable material:** PVC
- **Connector material:** TPU
- **Locking nut material:** CuZn, nickel-plated brass

Figure	Connection type head A	Connection type head B	Connecting cable	Type	Part no.
	Female connector, M12, 4-pin, straight, unshielded	Cable, Flying leads	2 m, 4-wire	DOL-1204-G02M	6009382
			5 m, 4-wire	DOL-1204-G05M	6009866
			10 m, 4-wire	DOL-1204-G10M	6010543
			15 m, 4-wire	DOL-1204-G15M	6010753
			20 m, 4-wire	DOL-1204-G20M	6034401
	Female connector, M12, 4-pin, angled, with 3 LEDs, unshielded	Cable, Flying leads	2 m, 4-wire	DOL-1204-L02M	6027945
			5 m, 4-wire	DOL-1204-L05M	6027944
			10 m, 4-wire	DOL-1204-L10M	6027946
	Female connector, M12, 4-pin, angled, unshielded	Cable, Flying leads	2 m, 4-wire	DOL-1204-W02M	6009383
			5 m, 4-wire	DOL-1204-W05M	6009867
			10 m, 4-wire	DOL-1204-W10M	6010541
			15 m, 4-wire	DOL-1204-W15M	6036474
			20 m, 4-wire	DOL-1204-W20M	6033559

Connecting cables with female connector M12, 4-pin, PUR

- **Cable material:** PUR
- **Connector material:** TPU
- **Locking nut material:** CuZn, nickel-plated brass

Figure	Connection type head A	Connection type head B	Connecting cable	Type	Part no.
	Female connector, M12, 4-pin, straight, shielded	Cable, Flying leads	5 m, 4-wire	DOL-1204-G05MA	6042100
	Female connector, M12, 4-pin, angled, shielded	Cable, Flying leads	5 m, 4-wire	DOL-1204-W05MA	6042098
	Female connector, M12, 4-pin, angled, unshielded	Cable, Flying leads	5 m, 4-wire	DOL-1204-W05MD	6020399

Connecting cables with female connector M12, 4-pin, PUR, halogen-free, Oil / grease resistant

- **Cable material:** PUR, halogen-free
- **Connector material:** TPU
- **Locking nut material:** zinc die-cast, nickel-plated

Figure	Connection type head A	Connection type head B	Connecting cable	Type	Part no.
	Female connector, M12, 4-pin, straight, unshielded	Cable, Flying leads	2 m, 4-wire	DOL-1204-G02MC	6025900
			5 m, 4-wire	DOL-1204-G05MC	6025901
			10 m, 4-wire	DOL-1204-G10MC	6025902
			15 m, 4-wire	DOL-1204-G15MC	6034749
			20 m, 4-wire	DOL-1204-G20MC	6034750
			25 m, 4-wire	DOL-1204-G25MC	6034751
	Female connector, M12, 4-pin, angled, with 3 LEDs, unshielded	Cable, Flying leads	2 m, 4-wire	DOL-1204-L02MC	6039086
			5 m, 4-wire	DOL-1204-L05MC	6020398
			10 m, 4-wire	DOL-1204-L10MC	6039088

Figure	Connection type head A	Connection type head B	Connecting cable	Type	Part no.
	Female connector, M12, 4-pin, angled, unshielded	Cable, Flying leads	2 m, 4-wire	DOL-1204-W02MC	6025903
			5 m, 4-wire	DOL-1204-W05MC	6025904
			10 m, 4-wire	DOL-1204-W10MC	6025905
			15 m, 4-wire	DOL-1204-W15MC	6034752
			20 m, 4-wire	DOL-1204-W20MC	6034753
			25 m, 4-wire	DOL-1204-W25MC	6034754

Connecting cables with female connector M12, 4-pin, PP, hygienic systems

- **Cable material:** PP
- **Connector material:** PP
- **Locking nut material:** stainless steel (V4A/1.4404)

Figure	Connection type head A	Connection type head B	Connecting cable	Type	Part no.
	Female connector, M12, 4-pin, straight, unshielded	Cable, Flying leads	2 m, 4-wire	DOL-1204-G02MRN	6058291
			5 m, 4-wire	DOL-1204-G05MRN	6058476
			10 m, 4-wire	DOL-1204-G10MRN	6058478
			25 m, 4-wire	DOL-1204-G25MRN	6058480
	Female connector, M12, 4-pin, angled, with 2 LEDs, unshielded	Cable, Flying leads	2 m, 4-wire	DOL-1204-L02MRN	6058482
			5 m, 4-wire	DOL-1204-L05MRN	6058483
			10 m, 4-wire	DOL-1204-L10MRN	6058484
			25 m, 4-wire	DOL-1204-L25MRN	6058485
	Female connector, M12, 4-pin, angled, unshielded	Cable, Flying leads	2 m, 4-wire	DOL-1204-W02MRN	6058474
			5 m, 4-wire	DOL-1204-W05MRN	6058477
			10 m, 4-wire	DOL-1204-W10MRN	6058479
			25 m, 4-wire	DOL-1204-W25MRN	6058481

Connecting cables with female connector M12, 4-pin, PVC, hygienic systems

- **Cable material:** PVC
- **Connector material:** PUR
- **Locking nut material:** stainless steel (V4A/1.4404)

Figure	Connection type head A	Connection type head B	Connecting cable	Type	Part no.
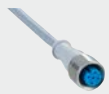	Female connector, M12, 4-pin, straight, unshielded	Cable, Flying leads	2 m, 4-wire	DOL-1204-G02MNI	6052613
			5 m, 4-wire	DOL-1204-G05MNI	6052615
			10 m, 4-wire	DOL-1204-G10MNI	6052617
			25 m, 4-wire	DOL-1204-G25MNI	6052619
	Female connector, M12, 4-pin, angled, with 3 LEDs, unshielded	Cable, Flying leads	2 m, 4-wire	DOL-1204-L02MNI	6052621
			5 m, 4-wire	DOL-1204-L05MNI	6052622
			10 m, 4-wire	DOL-1204-L10MNI	6052623
			25 m, 4-wire	DOL-1204-L25MNI	6052624
	Female connector, M12, 4-pin, angled, unshielded	Cable, Flying leads	2 m, 4-wire	DOL-1204-W02MNI	6052614
			5 m, 4-wire	DOL-1204-W05MNI	6052616
			10 m, 4-wire	DOL-1204-W10MNI	6052618
			25 m, 4-wire	DOL-1204-W25MNI	6052620

Connecting cables with female connector M12, 4-pin, Oil / grease resistant

Figure	Connection type head A	Connection type head B	Connecting cable	Type	Part no.
	Female connector, M12, 4-pin, straight, shielded	Cable, Flying leads	10 m, 4-wire	DOL-1204-G10MAC	6041797

Connecting cables with female connector M12, 5-pin, PP, hygienic systems

- **Cable material:** PP
- **Connector material:** PP
- **Locking nut material:** stainless steel (V4A/1.4404)

Figure	Connection type head A	Connection type head B	Connecting cable	Type	Part no.
	Female connector, M12, 5-pin, straight, unshielded	Cable, Flying leads	2 m, 5-wire	DOL-1205-G02MRN	6058494
			5 m, 5-wire	DOL-1205-G05MRN	6058495
			10 m, 5-wire	DOL-1205-G10MRN	6058496
			25 m, 5-wire	DOL-1205-G25MRN	6058497

➜ For dimensional drawings, please see page H-274

Connecting cables with male connector

Connecting cables with male connector M12, 4-pin, PUR, halogen-free, Oil / grease resistant

- **Cable material:** PUR, halogen-free
- **Connector material:** TPU
- **Locking nut material:** zinc die-cast, nickel-plated

Figure	Connection type head A	Connection type head B	Connecting cable	Type	Part no.
	Male connector, M12, 4-pin, straight, unshielded	Cable, Flying leads	2 m, 4-wire	STL-1204-G02MC	6028077
			5 m, 4-wire	STL-1204-G05MC	6048170
			0.29 m, 4-wire	STL-1204-G0M3C	6011311
			10 m, 4-wire	STL-1204-G10MC	6041750
			15 m, 4-wire	STL-1204-G15MC	6048171
	Male connector, M12, 4-pin, angled, unshielded	Cable, Flying leads	5 m, 4-wire	STL-1204-W05MC	6037472
			15 m, 4-wire	STL-1204-W15MC	6037473

➜ For dimensional drawings, please see page H-277

Connection cables with female connector and male connector

Connection cables with female connector and male connector M8, 3-pin, PUR, halogen-free, Oil / grease resistant

- **Cable material:** PUR, halogen-free
- **Connector material:** TPU
- **Locking nut material:** zinc die-cast, nickel-plated

Figure	Connection type head A	Connection type head B	Connecting cable	Type	Part no.
Illustration may differ	Female connector, M8, 3-pin, straight, unshielded	Male connector, M8, 3-pin, straight	1 m, 3-wire	DSL-0803-G01MC	6029405
			2 m, 3-wire	DSL-0803-G02MC	6029406
			3 m, 3-wire	DSL-0803-G03MC	6037696
			5 m, 3-wire	DSL-0803-G05MC	6032730
			10 m, 3-wire	DSL-0803-G10MC	6032731
			1.5 m, 3-wire	DSL-0803-G1M5C	6037695
			20 m, 3-wire	DSL-0803-G20MC	6035805
			2.5 m, 3-wire	DSL-0803-G2M5C	6035951
		Male connector, M12, 3-pin, straight	2 m, 3-wire	DSL-8203-G02MC	6025915
			5 m, 3-wire	DSL-8203-G05MC	6030608

H

8014939/2016-08-29

Subject to change without notice

Connection cables with female connector and male connector M8, 3-pin, PVC, chemical resistant

- **Cable material:** PVC
- **Connector material:** TPU
- **Locking nut material:** zinc die-cast, nickel-plated

Figure	Connection type head A	Connection type head B	Connecting cable	Type	Part no.
	Female connector, M8, 3-pin, straight, unshielded	Male connector, M12, 3-pin, straight	0.6 m, 3-wire	DSL-8203-G0M6	6022570
			2 m, 3-wire	DSL-8203-G02M	6022572
			5 m, 3-wire	DSL-8203-G05M	6027943

Connection cables with female connector and male connector M12, 4-pin, PVC

- **Cable material:** PVC
- **Connector material:** TPU
- **Locking nut material:** CuZn, nickel-plated brass

Figure	Connection type head A	Connection type head B	Connecting cable	Type	Part no.
	Female connector, M12, 4-pin, straight, unshielded	Male connector, M12, 4-pin, straight	2 m, 4-wire	DSL-1204-G02M	6022567
			5 m, 4-wire	DSL-1204-G05M	6022569

Connection cables with female connector and male connector M12, 4-pin, PUR, halogen-free, Oil / grease resistant

- **Cable material:** PUR, halogen-free
- **Connector material:** TPU
- **Locking nut material:** zinc die-cast, nickel-plated

Figure	Connection type head A	Connection type head B	Connecting cable	Type	Part no.
	Female connector, M12, 4-pin, straight, unshielded	Male connector, M12, 4-pin, straight	5 m, 4-wire	DSL-1204-G05MC	6033245
			10 m, 4-wire	DSL-1204-G10MC	6033698

Connection cables with female connector and male connector M12, 4-pin, PP, hygienic systems

- **Cable material:** PP
- **Connector material:** PP
- **Locking nut material:** stainless steel (V4A/1.4404)

Figure	Connection type head A	Connection type head B	Connecting cable	Type	Part no.
	Female connector, M12, 4-pin, angled, unshielded	Male connector, M12, 4-pin, straight	2 m, 4-wire	DSL-1204-B02MRN	6058502
			5 m, 4-wire	DSL-1204-B05MRN	6058503
	Female connector, M12, 4-pin, straight, unshielded	Male connector, M12, 4-pin, straight	2 m, 4-wire	DSL-1204-G02MRN	6058499
			5 m, 4-wire	DSL-1204-G05MRN	6058500

➜ For dimensional drawings, please see page H-277

Female connectors

Female connectors (ready to assemble) M8, 3-pin

- **Locking nut material:** CuZn

Figure	Connection type head A	Connection type head B	Connector material	Type	Part no.
	Female connector, M8, 3-pin, straight, unshielded	Screw-type terminals	PBT/PA	DOS-0803-G	7902077
	Female connector, M8, 3-pin, angled, unshielded	Solder connection	PA/Zinc diecast	DOS-0803-W	7902078

H

Female connectors (ready to assemble) M8, 4-pin

- **Locking nut material:** CuZn

Figure	Connection type head A	Connection type head B	Connector material	Type	Part no.
	Female connector, M8, 4-pin, straight, unshielded	Screw-type terminals	PBT/PA	DOS-0804-G	6009974
	Female connector, M8, 4-pin, angled, unshielded	Solder connection	PA/Zinc diecast	DOS-0804-W	6009975

Female connectors (ready to assemble) M12, 4-pin

- **Locking nut material:** CuZn

Figure	Connection type head A	Connection type head B	Connector material	Type	Part no.
	Female connector, M12, 4-pin, straight, unshielded	Screw-type terminals	PA	DOS-1204-G	6007302
		Cutting technology	–	DOS-1204-GQU6	6042088
				DOS-1204-GQU8	6053328
		Screw-type terminals	PA	DOS-1204-GX	6026528
	Female connector, M12, 4-pin, angled, unshielded	Screw-type terminals	PBT	DOS-1204-W	6007303
				DOS-1204-WX	6025570

Female connectors (ready to assemble) M12, 4-pin, hygienic systems

- **Locking nut material:** stainless steel (V4A/1.4404/316L)

Figure	Connection type head A	Connection type head B	Connector material	Type	Part no.
	Female connector, M12, 4-pin, straight, unshielded	Screw-type terminals	PA	DOS-1204-GN	6028357
	Female connector, M12, 4-pin, angled, unshielded	Screw-type terminals	PBT	DOS-1204-WN	6028358

Female connectors (ready to assemble) M12, 5-pin

- **Locking nut material:** CuZn

Figure	Connection type head A	Connection type head B	Connector material	Type	Part no.
	Female connector, M12, 5-pin, straight, unshielded	Screw-type terminals	PA	DOS-1205-G	6009719
	Female connector, M12, 5-pin, angled, unshielded	Screw-type terminals	PBT	DOS-1205-W	6009720

→ For dimensional drawings, please see page H-278

Male connectors

Male connectors (ready to assemble) M8, 3-pin

- **Locking nut material:** CuZn

Figure	Connection type head A	Connection type head B	Connector material	Locking nut material	Type	Part no.
	Male connector, M8, 3-pin, straight, unshielded	Screw-type terminals	PBT/PA	CuZn	STE-0803-G	6037322
Illustration may differ	Male connector, M8, 3-pin, angled, unshielded	Screw-type terminals	PBT	Nickel-plated brass	STE-0803-WSK	6053170

Male connectors (ready to assemble) M8, 4-pin

- **Locking nut material:** CuZn

Figure	Connection type head A	Connection type head B	Connector material	Type	Part no.
	Male connector, M8, 4-pin, straight, unshielded	Screw-type terminals	PBT/PA	STE-0804-G	6037323

Male connectors (ready to assemble) M12, 4-pin

- **Locking nut material:** CuZn

Figure	Connection type head A	Connection type head B	Connector material	Type	Part no.
	Male connector, M12, 4-pin, straight, unshielded	Screw-type terminals	PA	STE-1204-G	6009932
		Cutting technology	–	STE-1204-GQU6	6042089
	Male connector, M12, 4-pin, angled, unshielded	Screw-type terminals	PBT	STE-1204-W	6022084

Male connectors (ready to assemble) M12, 4-pin, hygienic systems

- **Locking nut material:** stainless steel (V4A/1.4404)

Figure	Connection type head A	Connection type head B	Connector material	Type	Part no.
	Male connector, M12, 4-pin, straight, unshielded	Screw-type terminals	PA	STE-1204-GN	6028359
			PBT	STE-1204-TN	6028360

Male connectors (ready to assemble) M12, 5-pin

- **Locking nut material:** CuZn, nickel-plated brass

Figure	Connection type head A	Connection type head B	Connector material	Type	Part no.
	Male connector, M12, 5-pin, straight, A-coded, unshielded	Spring-cage connection	PA	STE-1205-GFE	6044999

→ For dimensional drawings, please see page H-279

Dimensional drawings connection systems

Connecting cables with female connector

DOL-0803-GxxM

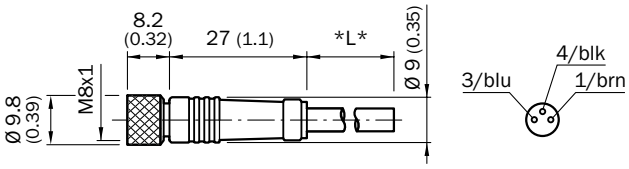

DOL-0803-WxxM

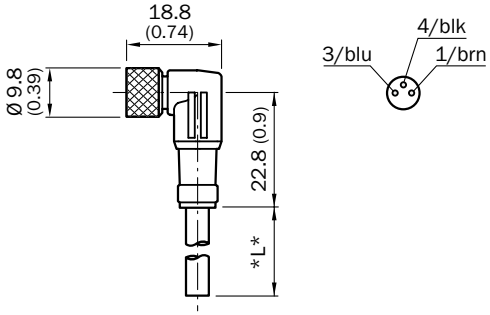

DOL-0803-GxxMC

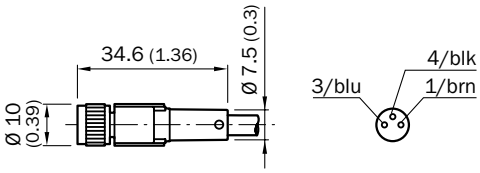

DOL-0803-LxxMC

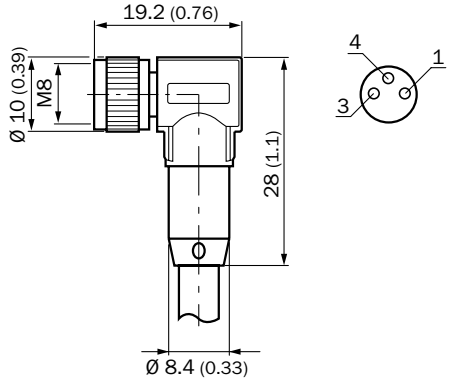

DOL-0803-WxxMC

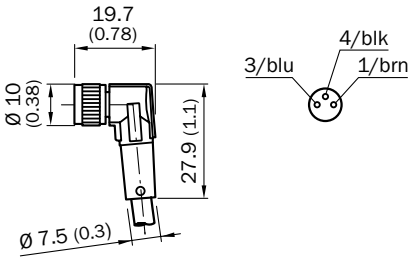

DOL-0803-GxxMRN

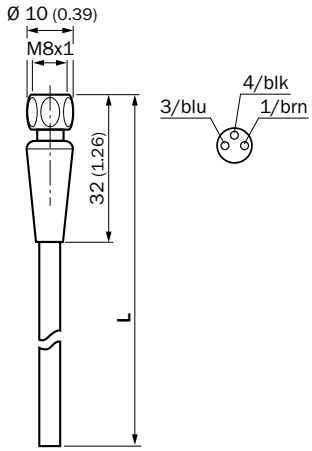

H

DOL-0803-LxxMRN / DOL-0803-WxxMRN

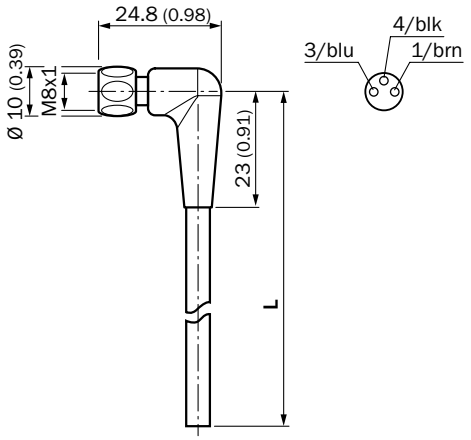

DOL-1204-GxxM

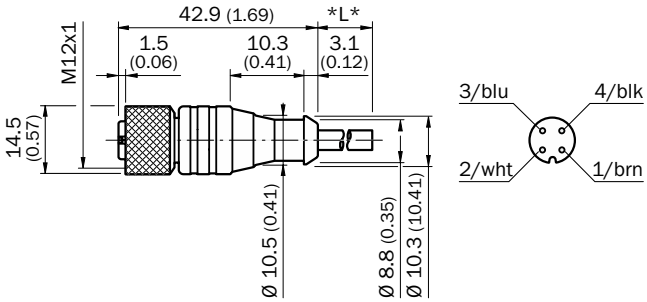

DOL-1204-W02M / DOL-1204-LxxM

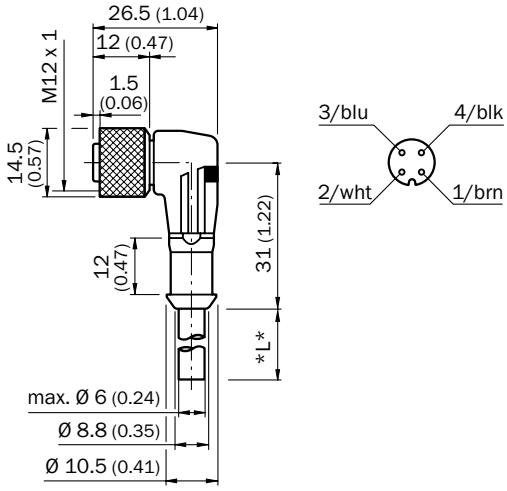

DOL-1204-G05MA

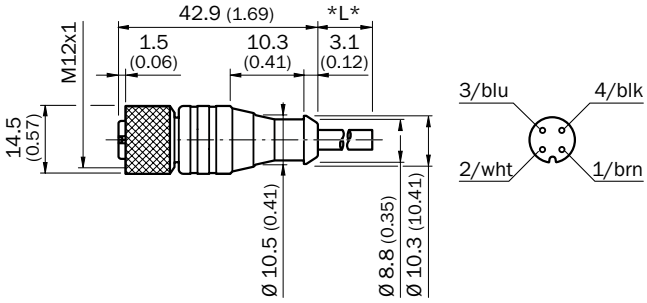

DOL-1204-W05MA

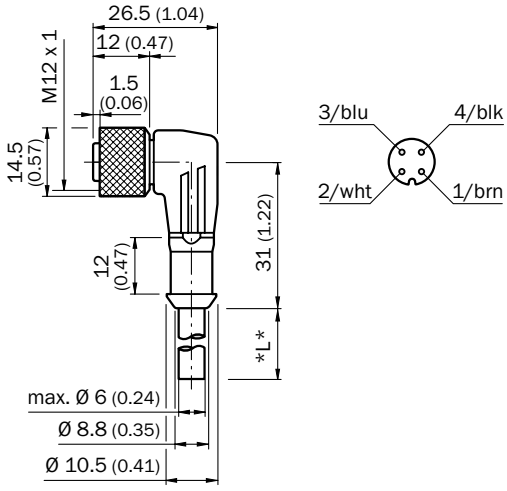

DOL-1204-GxxMC

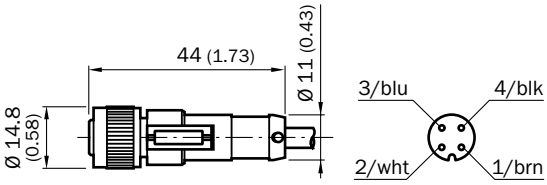

H

DOL-1204-LxxMC

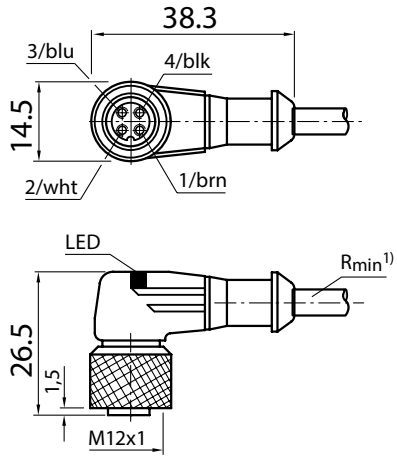

DOL-1204-WxxMC

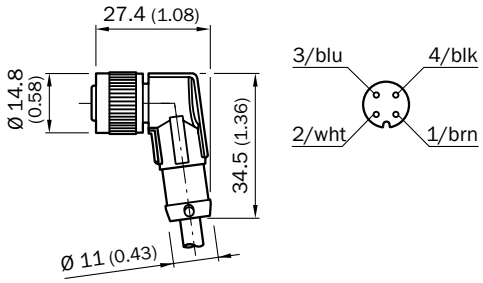

DOL-1204-GxxMRN / DOL-1205-GxxMRN

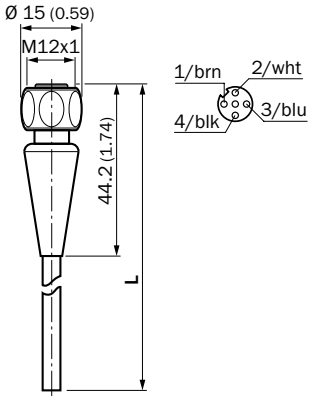

DOL-1204-LxxMRN

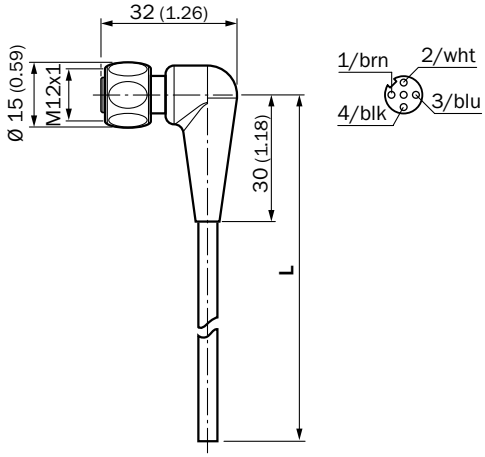

DOL-1204-GxxMNI

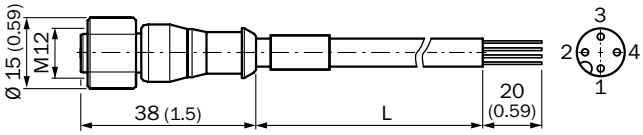

① Brn
② Wht
③ Blu
④ Blk

DOL-1204-LxxMNI

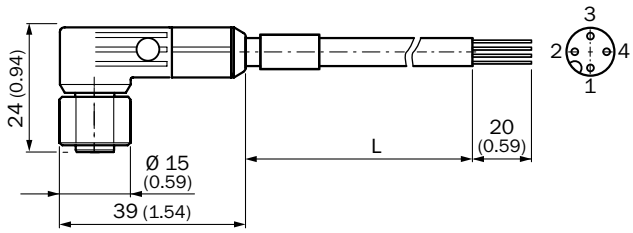

① Brn
② Wht
③ Blu
④ Blk

H

8014939/2016-08-29
Subject to change without notice

DOL-1204-WxxMNI

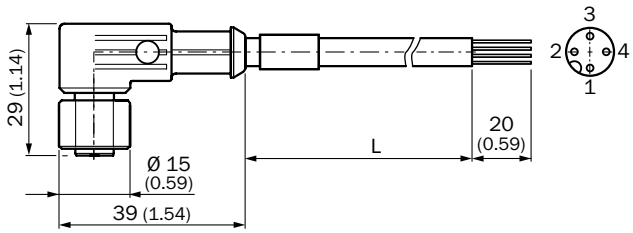

① Brn
② Blk
③ Blu
④ Wht

DOL-1204-GxxMAC

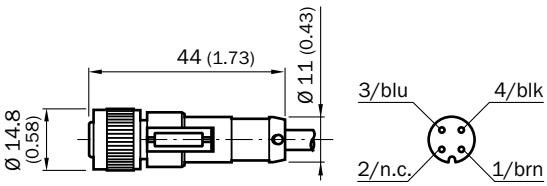

Connecting cables with male connector

STL-1204-GxxMC

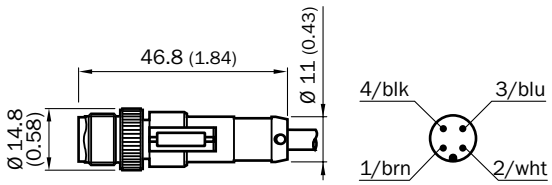

STL-1204-WxxMC

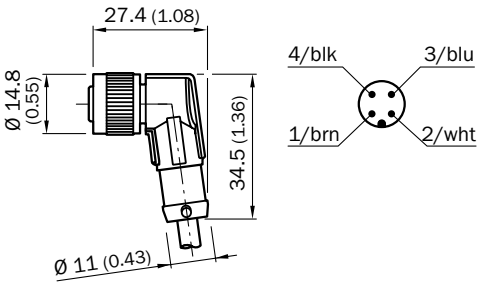

Connection cables with female connector and male connector

DSL-0803-GxxMC

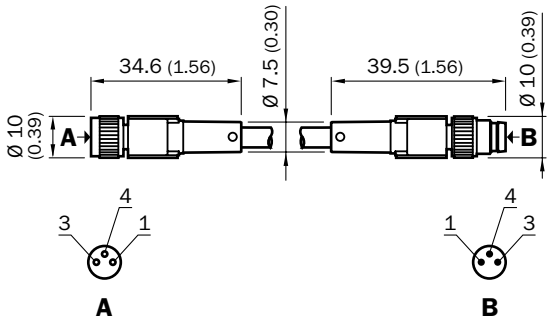

DSL-8203-GxxMC

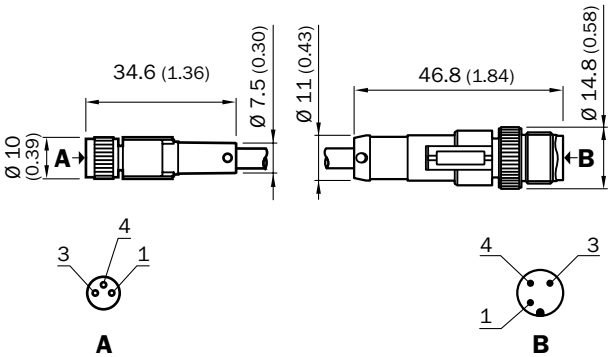

DSL-1204-GxxM

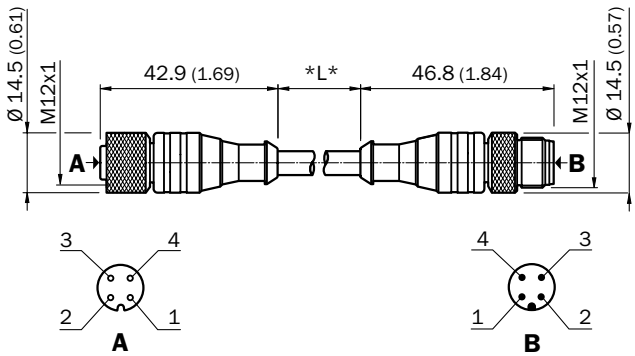

DSL-1204-GxxMC

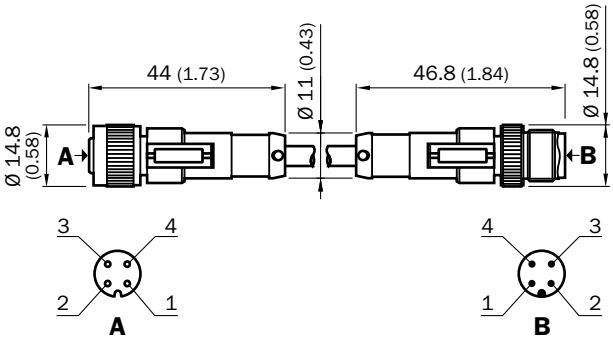

H

DSL-1204-BxxMRN

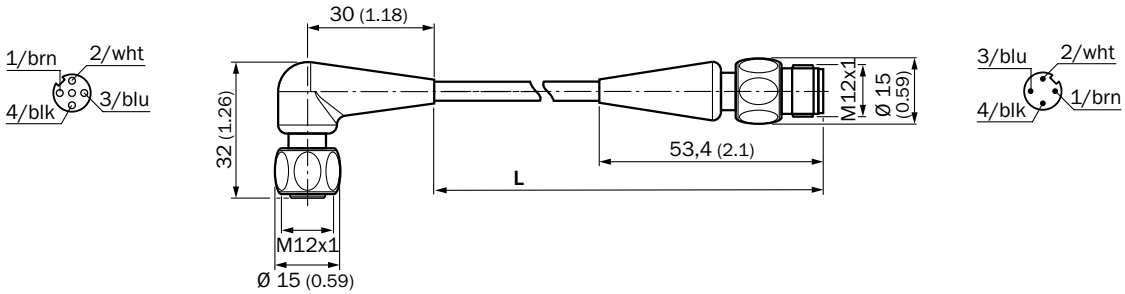

DSL-1204-GxxMRN

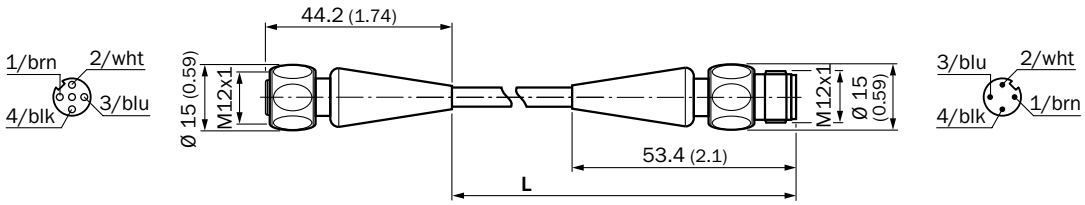

Female connectors

DOS-0803-G

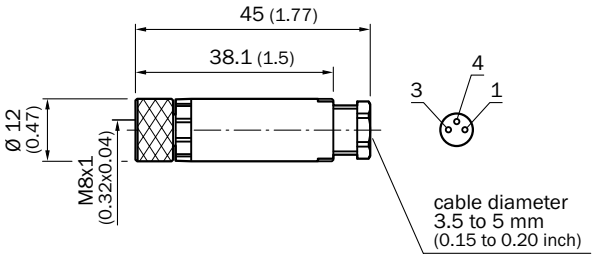

DOS-0803-W

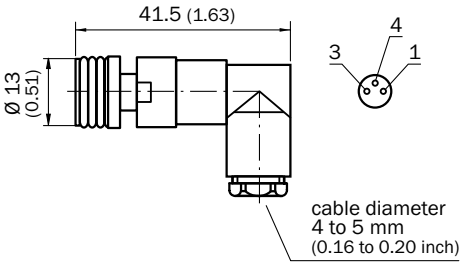

DOS-0804-G

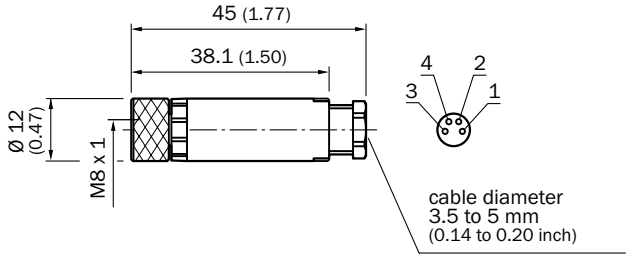

DOS-0804-W

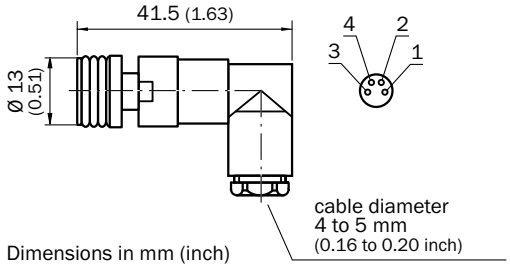

Dimensions in mm (inch)

DOS-1204-G

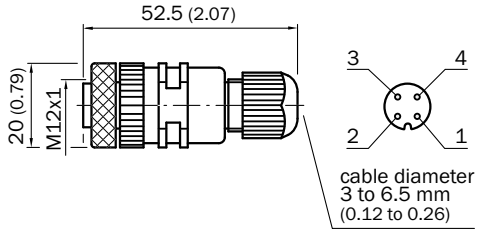

DOS-1204-GQU6

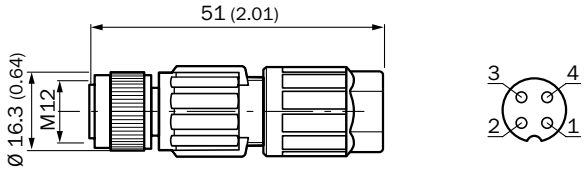

DOS-1204-W

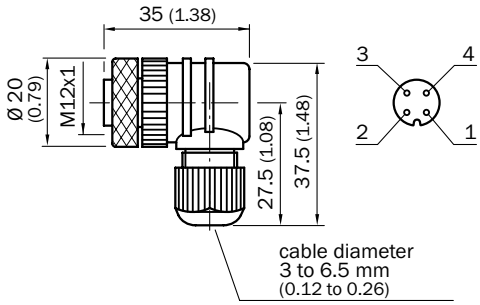

DOS-1205-G

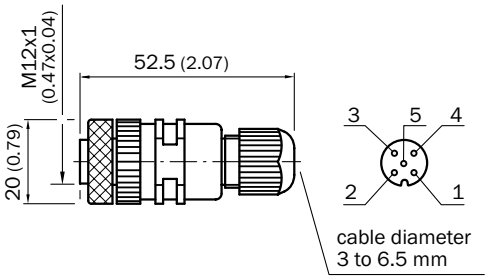

DOS-1205-W

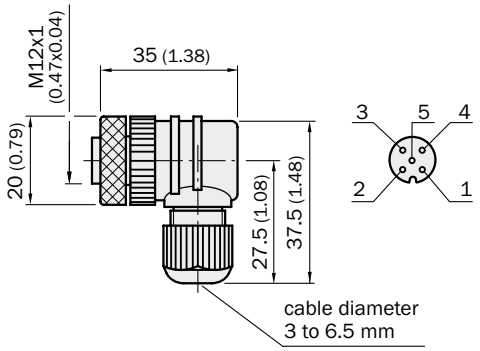

Male connectors

STE-0803-G

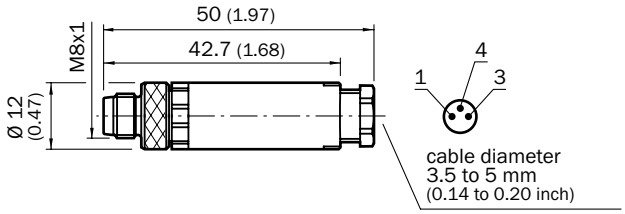

STE-0803-WSK

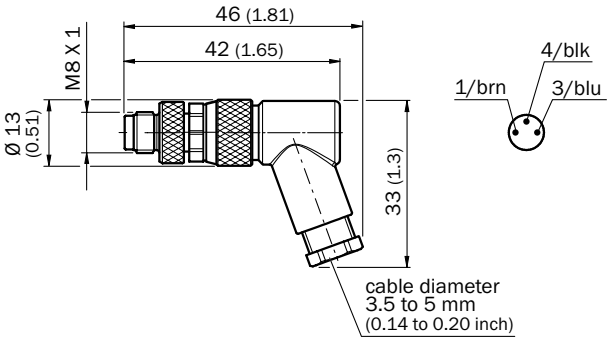

STE-0804-G

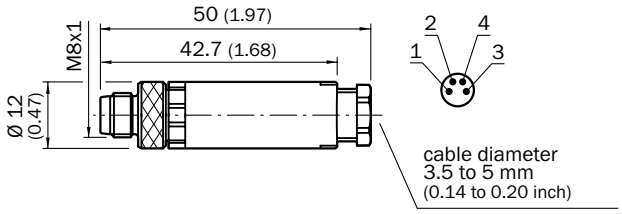

STE-1204-G

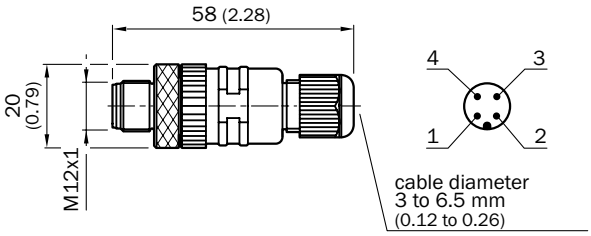

STE-1204-W

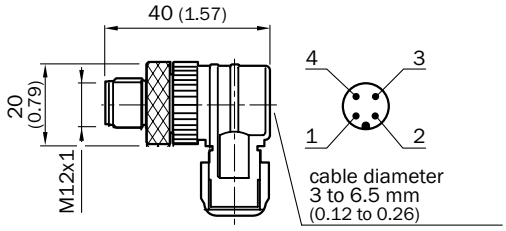

STE-1204-TN

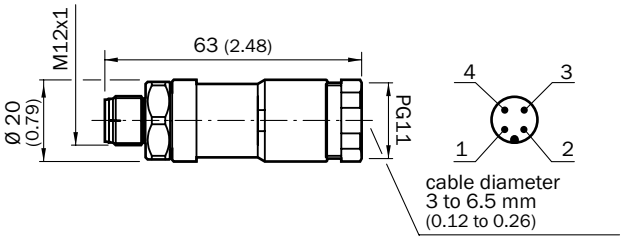

H

Modules and gateways

Fieldbus modules

Figure	Brief description	Type	Part no.
Illustration may differ	EtherCAT IO-Link Master, IO-Link V1.1, power supply via 7/8'' cable 24 V / 8 A, fieldbus connection via M12 cable	IOLG2EC-03208R01 (IO-Link Master)	6053254
Illustration may differ	EtherNet/IP IO-Link Master, IO-Link V1.1, power supply via 7/8'' cable 24 V / 8 A, fieldbus connection via M12-cable	IOLG2EI-03208R01 (IO-Link Master)	6053255
	PROFINET IO-Link Master, IO-Link V1.1, Class A port, power supply via 7/8'' cable 24 V / 8 A, fieldbus connection via M12 cable	IOLG2PN-03208R01 (IO-Link Master)	6053253
	Number of IO-Link ports: 4; Communication mode: COM1/COM2; IO-Link version: IO-Link V1.0; Switching input: PNP; Supply voltage Vs, IO-Link ports: DC 24 V; Current loading: 800 mA; Data transmission rate: Max. 12 MBaud, Autobaud; Address space occupation: 1 bis 126; Connection type: Connector M12; Connection type, IO-Link ports: Connector M12, 5-pin; Suppyl voltage Vs, module: DC 18 ... 30 V; Power consumption: Typ. 75 mA / max. 100 mA (at UL with DC 24 V), Typ. 25 mA + sensor current / max. 80	IOLSHPB-P3104R01	6039728

Power supply modules

Figure	Brief description	Type	Part no.
	NAMUR isolatig amplifier, Cable fault detection, Switching outputs: 2 NO relay (1 per channel), Supply voltage: 24 V ... 230 V, Voltage type: AC/DC	EN2-2EX1	6041096

Figure	Brief description	Type	Part no.
	NAMUR isolatig amplifier, Cable fault detection, Switching outputs: 2 NO relay (1 per channel), Supply voltage: 19,2 V ... 30 V, Voltage type: DC	EN2-2EX3	6041095

➜ For dimensional drawings, please see page H-281

Dimensional drawings modules and gateways

Fieldbus modules

IOLG2EC-03208R01 (IO-Link Master) (6053254)

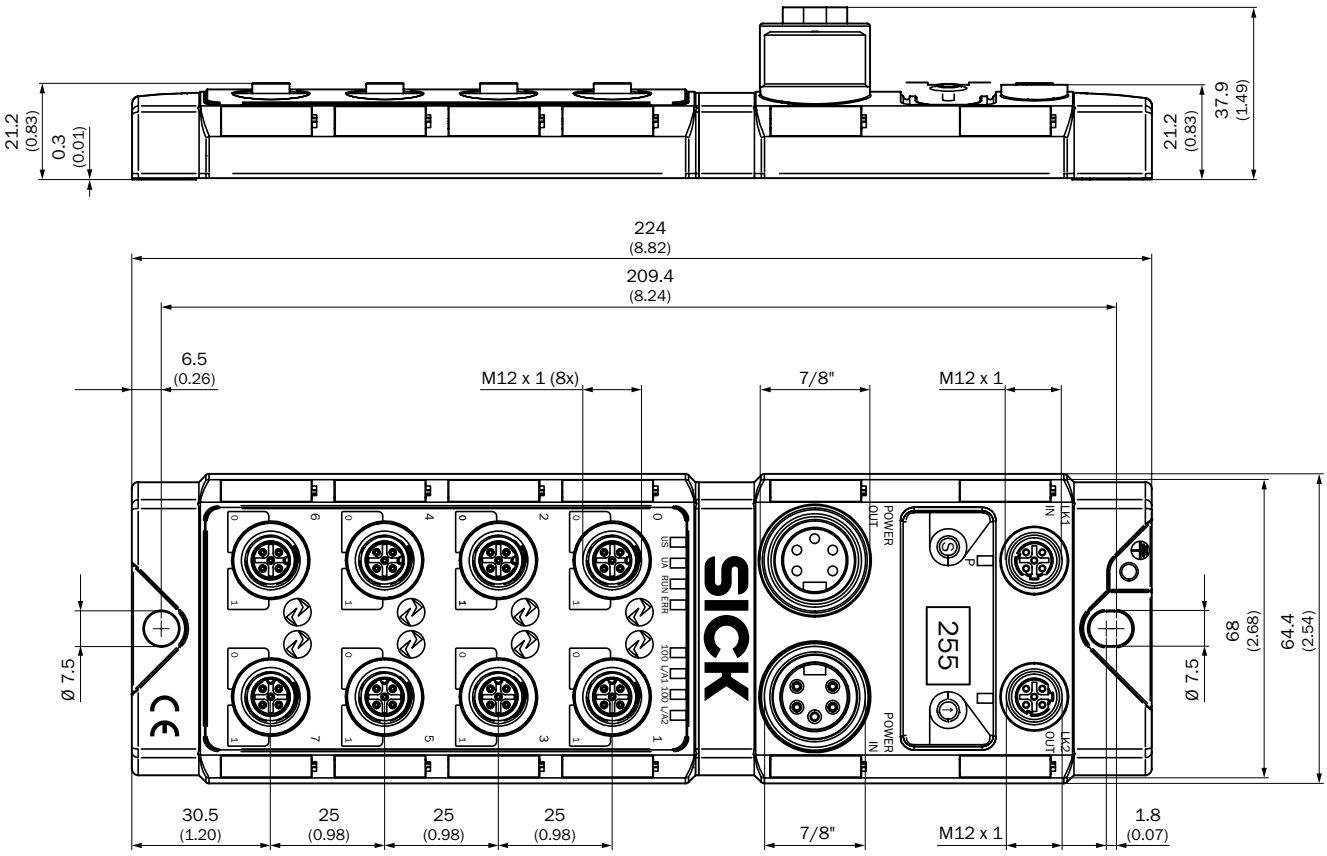

H

IOLG2EI-03208R01 (IO-Link Master) (6053255)

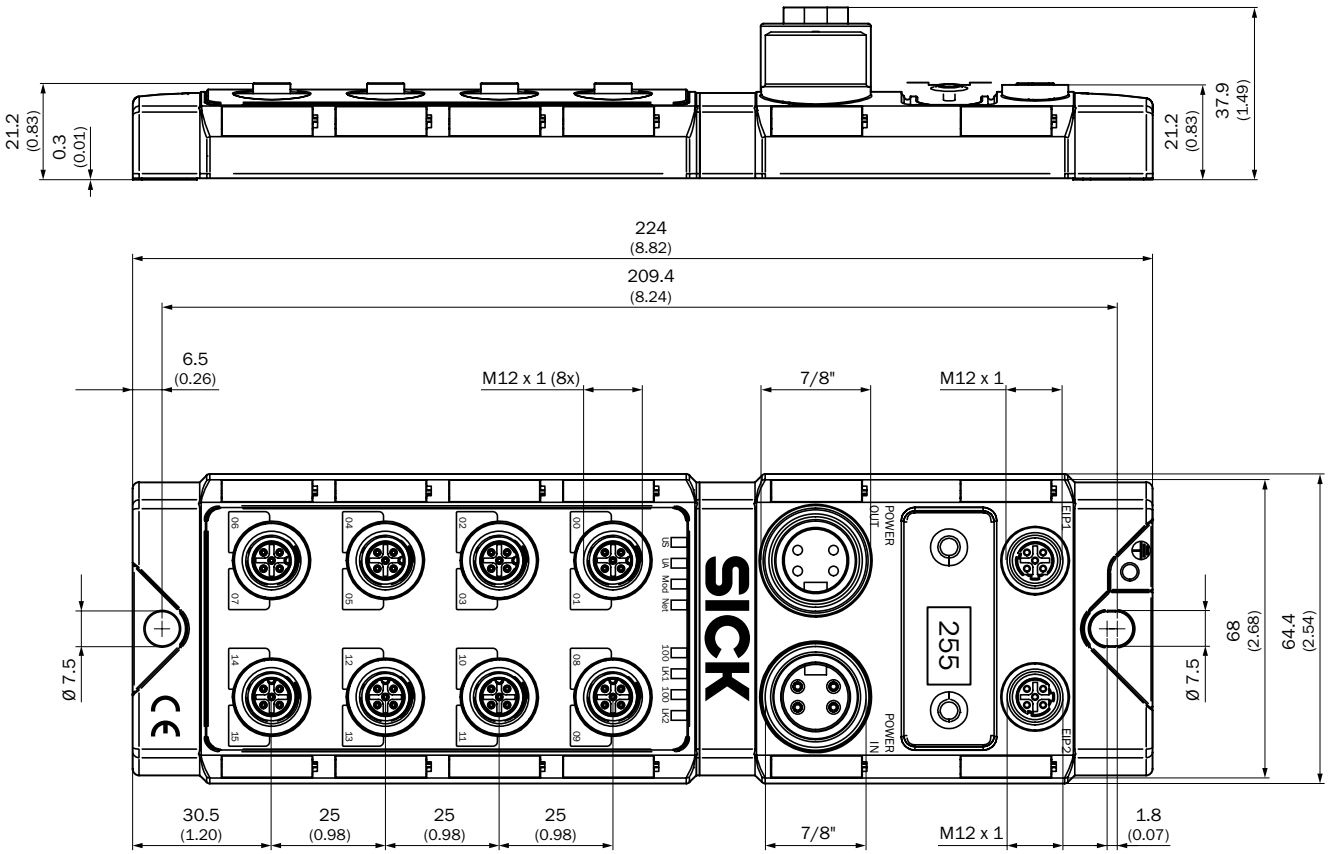

IOLG2PN-03208R01 (IO-Link Master) (6053253)

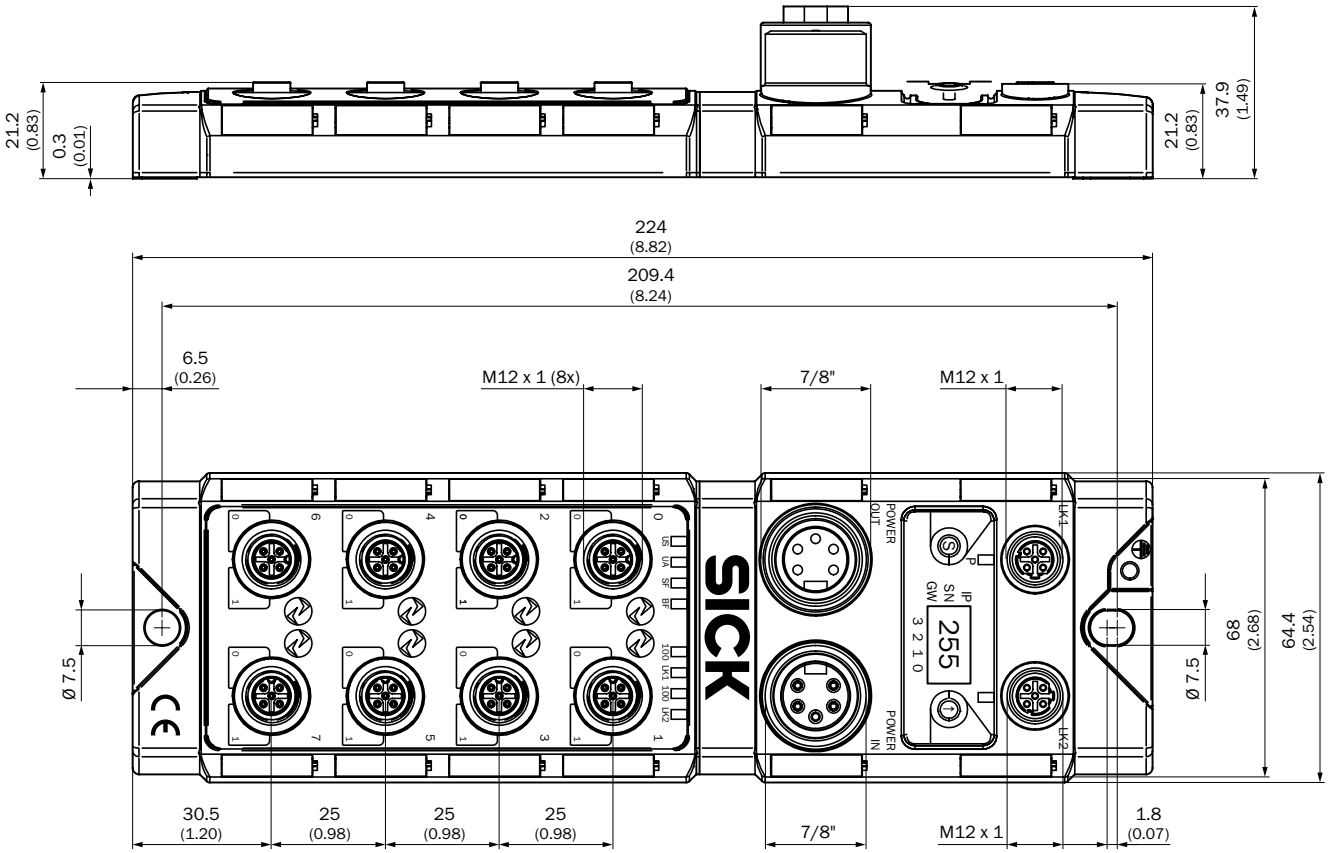

IOLSHPB-P3104R01 (6039728)

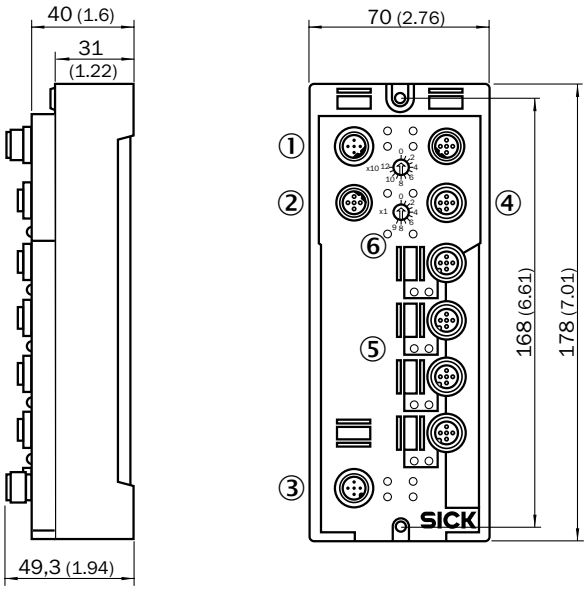

① Bus IN
② Bus OUT
③ Power supply IN
④ Power supply OUT
⑤ Port 1...4
⑥ Bus adress rotary switch

EN2-2EX1 (6041096)

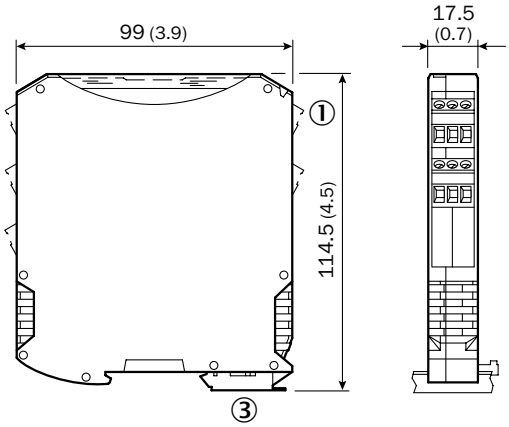

EN2-2EX3 (6041095)

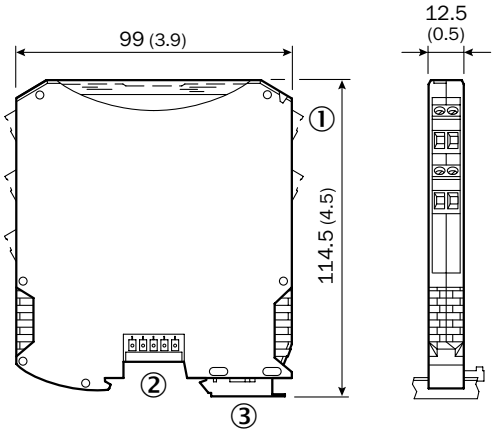

H

PROXIMITY SENSOR TECHNOLOGY IN DETAIL

Depending on which object material is to be detected or which special application is to be solved, different proximity sensor technology is used. The sensing range taking into account a possible reduction factor is decisive for selecting the best sensor from the product family group.

Sensing range

The sensing range S_n of a proximity sensor is the distance at which a signal change is triggered when the target, i.e., the object to be detected, approaches the sensing face axially.

In order to get comparable values for the sensing range of the proximity sensors, the standard target was defined for metallic material made of steel or oxide magnet. In the technical data of the proximity sensors from SICK, this value is always specified. It does not account for external influences or sample variances.

	Inductive/capacitive	Magnetic
Material	St37 (steel)	Oxide magnet (barium ferrite)
Dimension	1 mm thick (square)	Ø 30 mm x 10 mm high (M4.0, round)
	Side length = Sensing face diameter or 3 x S_n [1)]	

[1)] The larger of the two values indicates the side length of the standard target.

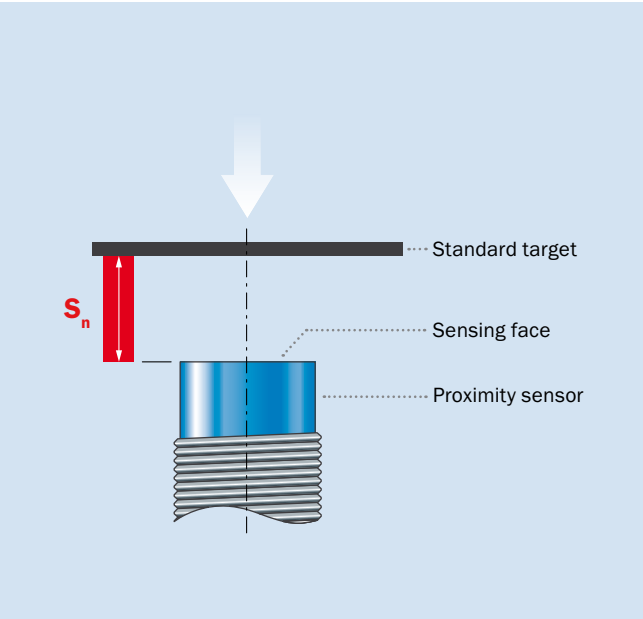

The sensing range S_n specified in the technical data does not account for external influences or sample variances and therefore, is only a conventional size.
Depending on the selected sensor principle, different tolerance ranges are possible, in which the actual measured sensing range of the sensors can vary.

Tolerance ranges

Inductive and magnetic proximity sensors
- $0.81 \times S_n$ < tolerance range < $1.21 \times S_n$

Capacitive proximity sensors
- $0.72 \times S_n$ < tolerance range < $1.32 \times S_n$

In practice, the **assured sensing range S_a** is always used in designing a sensor to ensure switching in consideration of all tolerance influences and to operate the sensor in an assured working range.

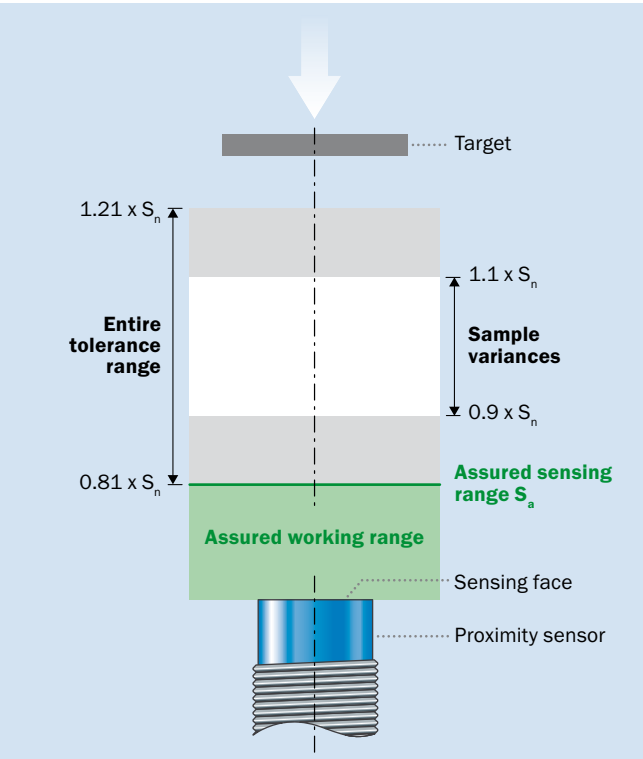

8014939/2016-08-29
Subject to change without notice

Assured sensing range S_a

The distance at which a response from the proximity sensor is ensured under the specified temperature, installation and voltage conditions.

Formula for calculating assured sensing range S_a

Inductive and magnetic proximity sensors

▸ $S_a = 0.81 \times S_n$

Capacitive proximity sensors

▸ $S_a = 0.72 \times S_n$

Reduction factor

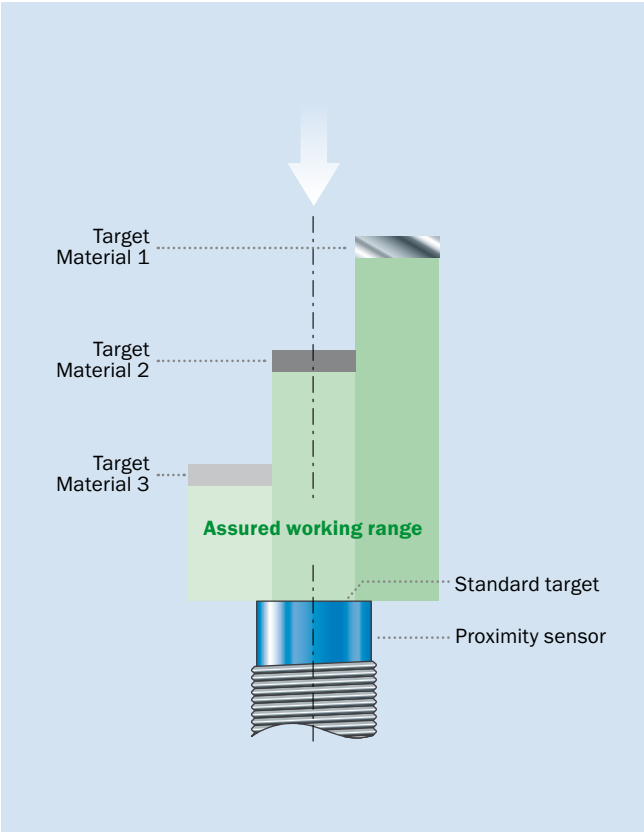

If an object is detected from another material made of steel or oxide magnet, the sensing range is reduced. The reduction is expressed with reduction factor Rm. Therefore, additional standard values for the reduction factor are specified in the technical data.

Inductive

Material	Reduction factor R_m
Steel (St37)	1
Stainless steel	0.65 ... 0.9 [1]
Aluminum	0.2 ... 0.5 [1]

[1] Depending on the sensor.

Capacitive

Material	Reduction factor R_m
Water	1
PVC	0.4
Oil	0.25

Magnetic

Magnet	Reduction factor R_m
M5.0	1.1 ... 1.2 [1]
M4.0	1
M1.0	0.25 ... 0.38 [1]

[1] Depending on the sensor.

Example calculation of the assured working range for inductive and magnetic proximity sensors:

Material	Aluminum ($R_m = 0.5$)
Sensing range S_n	20 mm
$S_a = 0.81 \times S_n = 0.81 \times 20$ mm = 16.2 mm Assured working range = $R_m \times S_a = 0.5 \times 16.2$ mm = 8.1 mm	
▸ **The assured working range is 8.1 mm.**	

Example calculation of the assured working range for capacitive proximity sensors:

Material	PVC ($R_m = 0.4$)
Sensing range S_n	10 mm
$S_a = 0.72 \times S_n = 0.72 \times 10$ mm = 7.2 mm Assured working range = $R_m \times S_a = 0.4 \times 7.2$ mm = 2.88 mm	
▸ **The assured working range is 2.88 mm.**	

More definitions for the proximity sensor technologies can be found in

➜ Chapter J – Appendix/Glossary

INDUCTIVE PROXIMITY SENSOR TECHNOLOGY

Technology and principle of operation

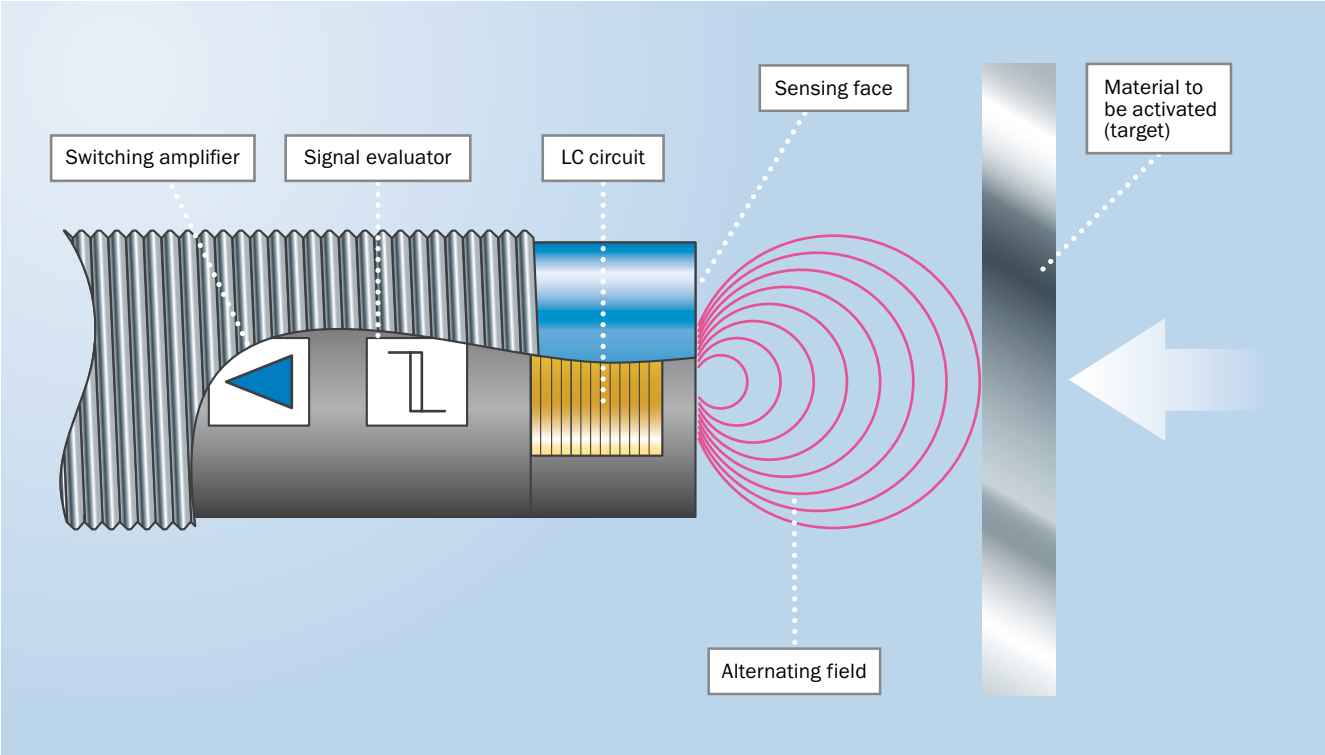

An inductive proximity sensor consists of an LC circuit – i.e., a resonant electrical circuit comprising a coil (L) and a capacitor (C) – a signal evaluator and a switching amplifier.

Inductive proximity sensors can take two output states, which are described as activated and deactivated. To detect metallic objects, the coil of the resonant circuit generates a high frequency electromagnetic alternating field that emerges from the sensing face of the sensor. The size of the field is defined by the size of the ferrite core and the coil.

If an activated material approaches the sensing face, non-ferrous metal eddy currents are generated. In ferromagnetic metals, there are additional core losses. These losses deprive the resonant circuit of energy and dampen the oscillation. The signal evaluator detects this change and translates this into a switching signal.

The inductive proximity technology is also an integral part of our inductive safety switches.

You can find capacitive proximity sensors in **➜ Chapter C and Chapter D**

8014939/2016-08-29
Subject to change without notice

CAPACITIVE PROXIMITY SENSOR TECHNOLOGY

Technology and principle of operation

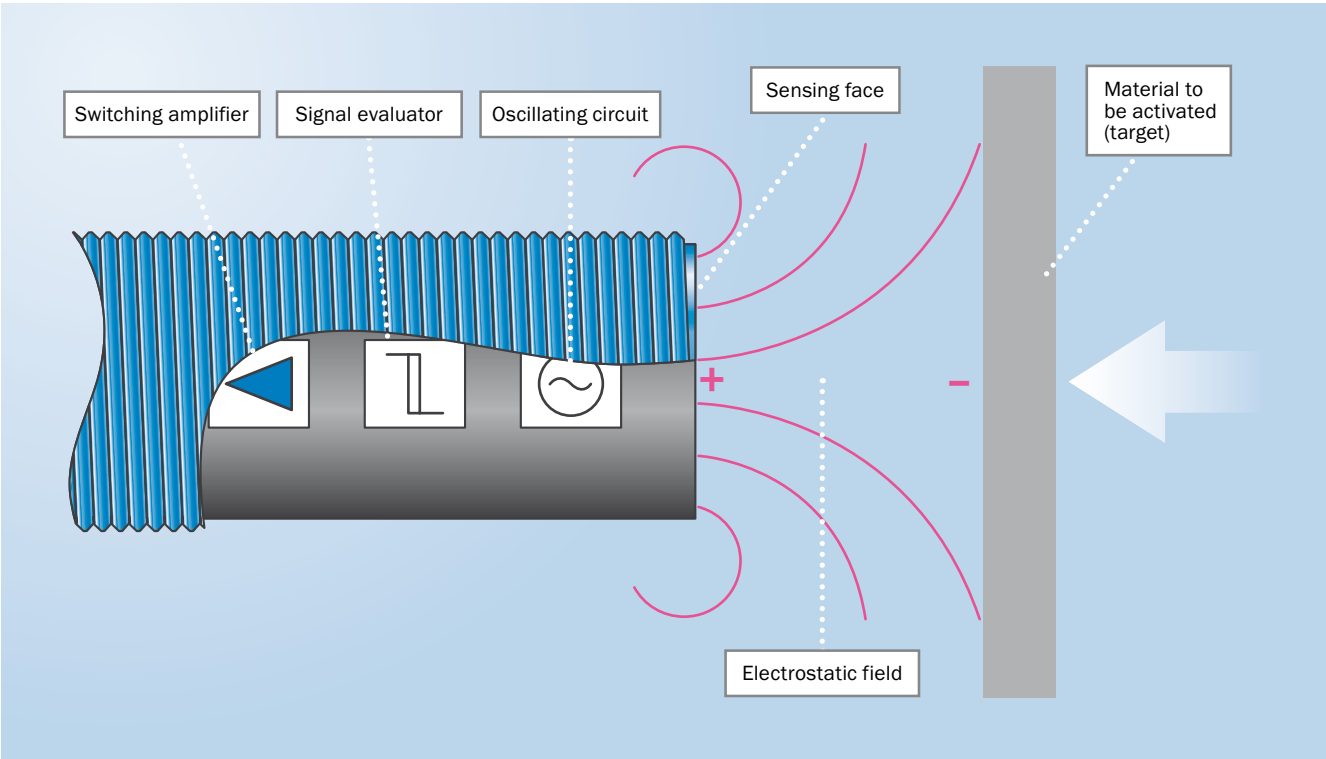

For capacitive proximity sensors, the principle of an open capacitor is used. The sensor contains an active electrode from which an electrostatic field to earth (ground potential) develops. This capacitance is part of a resonant circuit and affects the fundamental vibration behavior.

If an object/medium finds itself in the electrical field, the vibration behavior of the resonant circuit changes (based on its dielectric properties) and there is a change in amplitude. The signal evaluator detects this change in amplitude, which has the switching amplifier give the signal to switch. The closer the object comes to the active electrode, the greater the change in capacitance.

Special features

Detecting all the way through the material

Wall thicknesses of 10 to 20 mm in the case of plastic or glass containers.

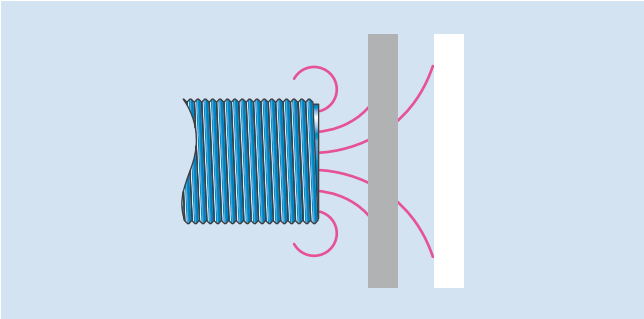

Harsh environment

Highly resistant to vibrations, dust, dirt, etc.

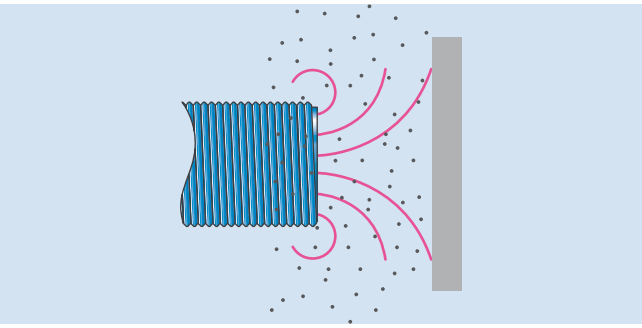

Detecting of all materials possible

Wood, paper, metal, plastic, liquids, granules.

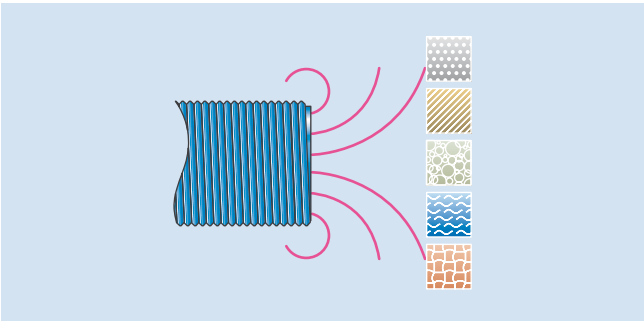

Relatively large sensing ranges with a compact design

Up to S_n = 25 mm (CM30/CQ35).

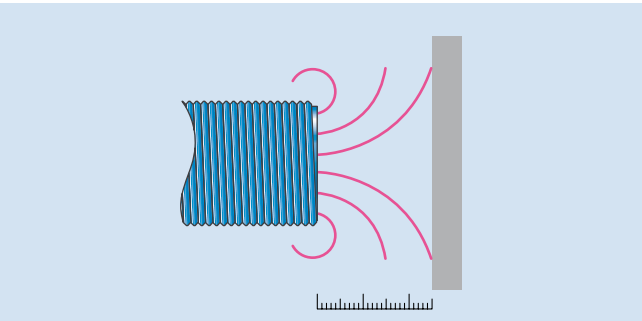

High electromagnetic and electrostatic compatibility

Thanks to Tripleshield technology.

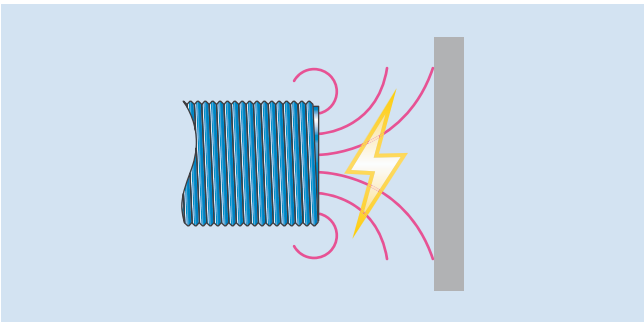

Other technological features of the capacitive proximity sensors (e.g., the meaning and definition of dielectric constant εr) are described in ➜ Chapter J – Appendix/Glossary.

You can find capacitive proximity sensors in ➜ Chapter E

MAGNETIC PROXIMITY SENSOR TECHNOLOGY

Technology and principle of operation

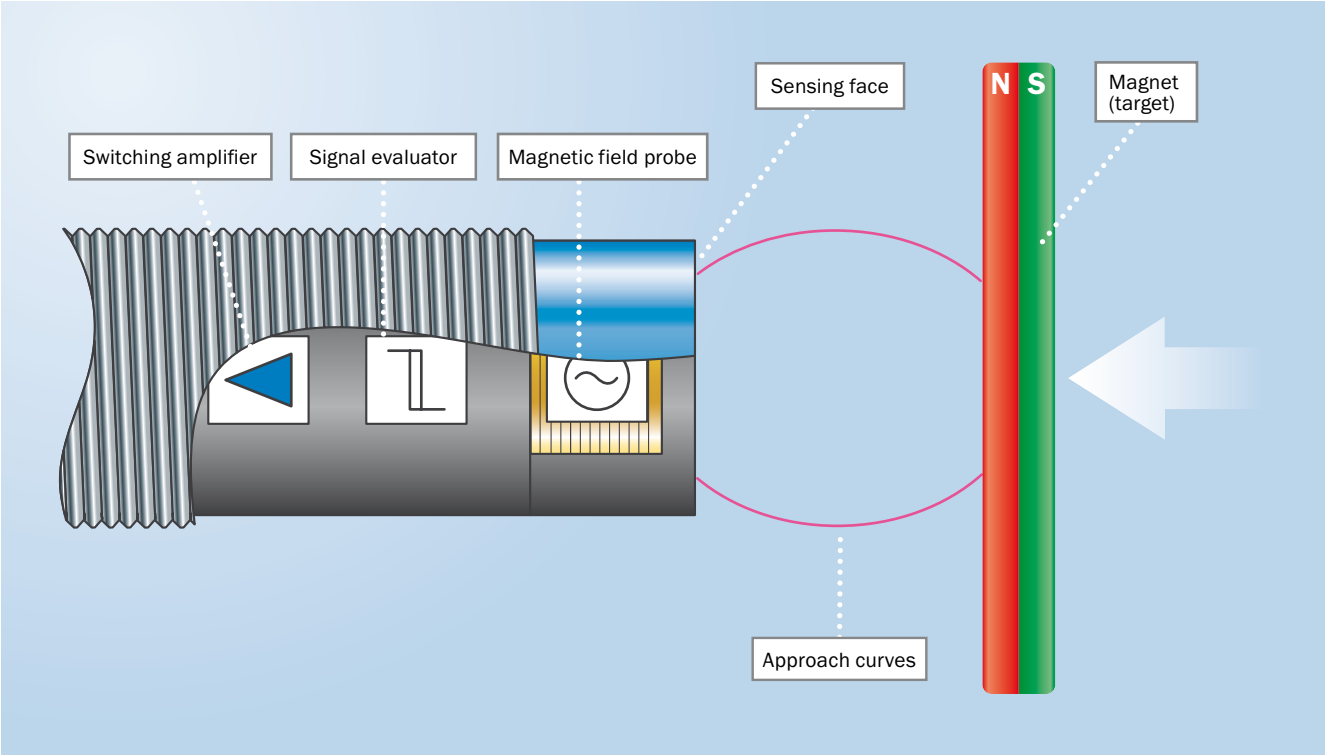

Magnetic proximity sensors always respond to a magnet (magnetic encoder). Magnetic fields penetrate all non-magnetic materials, e.g., non-ferrous metal, plastic or wooden walls. Therefore, magnets can also detect through these walls without affecting the sensing range.

For the magnetic proximity sensors from SICK, two detection technologies are used.

GMR technology (Giant Magneto Resistive effect)

Resistors that change their ohmic value by magnetic fields are arranged in a Wheatstone bridge. When exposed to a magnet field, the bridge voltage increases. The signal evaluator generates an output signal from a defined threshold.

LC circuit technology

An LC circuit is pre-activated from a highly permeable, amorphous glass metal strip. It resonates with a small amplitude. If an external magnet field appears, the highly permeable (highly magnetically conductive) glass metal strip is brought into saturation. Activation of the LC circuit by the glass metal strip no longer occurs. The amplitude of the resonant circuit increases whereby a defined threshold is reached and an output signal generated. This technology is well suited for high sensing ranges (S_n > 70 mm with M4.0 magnet).

Special features

Approach curves

When using magnetic proximity sensors, make sure that the alignment of the magnet relative to the sensor axis changes the sensing range. A distinction is made between the following cases:

Sensor and magnet axes are in the same plane to each other

Case 1

The sensor responds when the magnet reaches the switch curve. It can approach the proximity sensor axially or pass within the sensing range in front of the sensor.

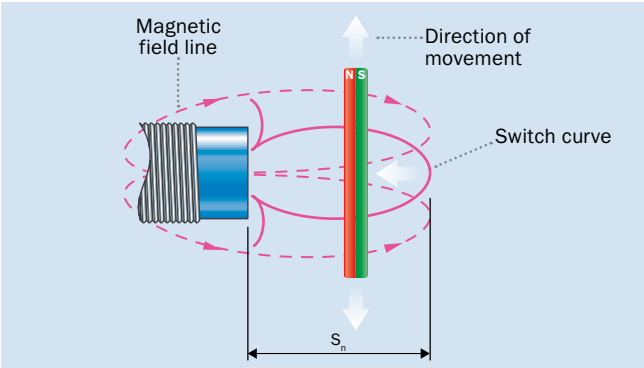

Case 2

The sensor responds when the magnet reaches the switch curve from the side. If the magnet leaves the switch curve, the sensor switches back again.

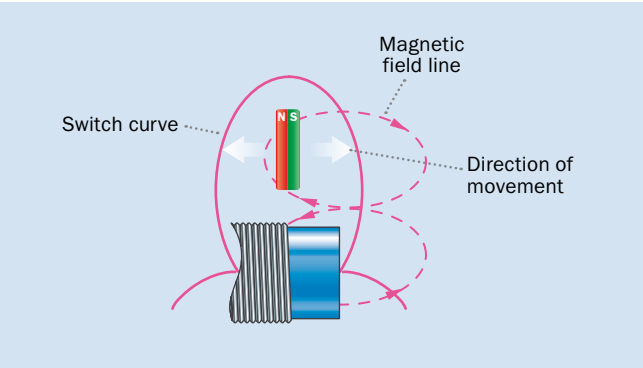

Sensor and magnet axes are offset by 90°

Case 3

If the magnet passes in front of the proximity sensor radially, the sensing range is less than in case 1. If the magnet travels into the left switch curve from the right switch curve, for example, it passes through an area in which the magnetic field is reversed. The proximity sensor is briefly deactivated before it is activated again in the left switch curve. Whether the evaluation unit can detect this interruption depends on the speed of travel and the axial distance of the passing magnet.

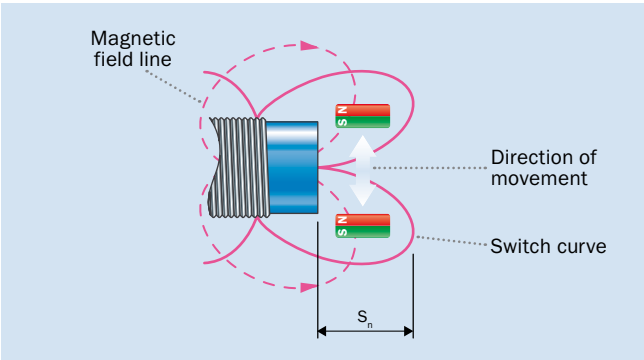

Case 4

The magnet also passes through two switch curves. At the boundary, the magnetic field is reversed and there are two switching points. The solubility of this interruption also depends on the speed of travel and the radial distance to the sensor axis.

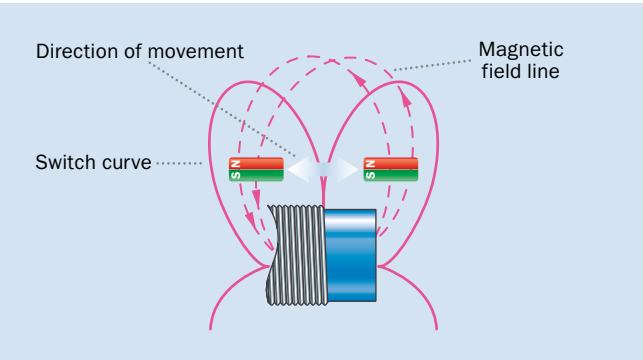

Other technological features of the magnetic proximity sensors (e.g. the meaning and definition of overrun distance $S_ü$ or installation notes) are described in ➜ „Chapter J – Appendix/Glossary“ on page J-292.

Installation notes

Flush sensor installation

Magnetic proximity sensors can be installed flush in all materials and metals with affecting the sensing range with the exception of magnetizable materials.

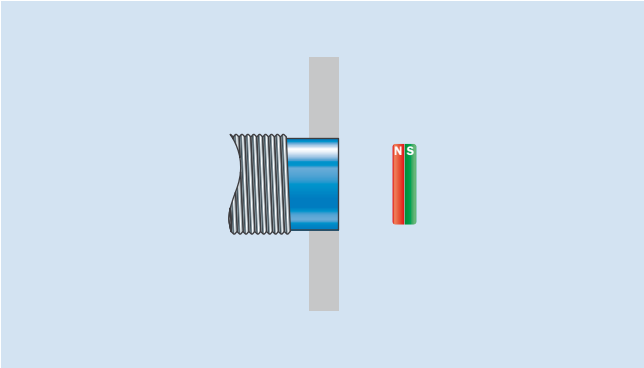

Non-flush sensor installation

The table shows how much the proximity sensor must protrude when installed in magnetic materials to prevent a reduction in the sensing range by more than 5%. Measurement standard MAG-3010-B (M 4.0).

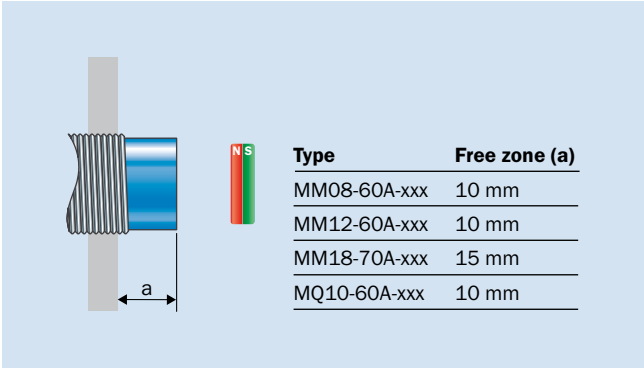

Type	Free zone (a)
MM08-60A-xxx	10 mm
MM12-60A-xxx	10 mm
MM18-70A-xxx	15 mm
MQ10-60A-xxx	10 mm

Flush magnet installation

For flush installation of the magnets in magnetic materials, the sensing range is reduced by up to 60 %.

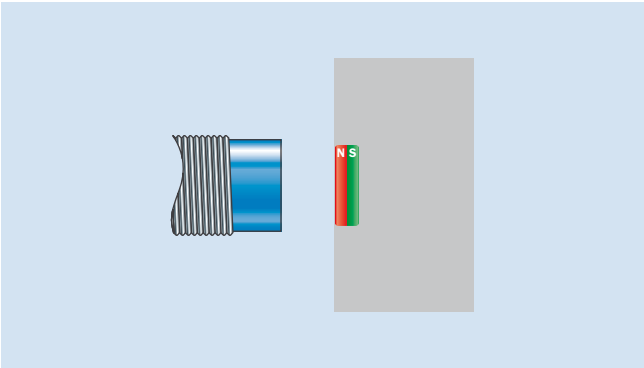

Object detection through surfaces

Because magnetic fields penetrate all non-magnetic materials, magnetic proximity sensors can detect objects/media behind e.g. non-ferrous metal, plastic or wooden walls.

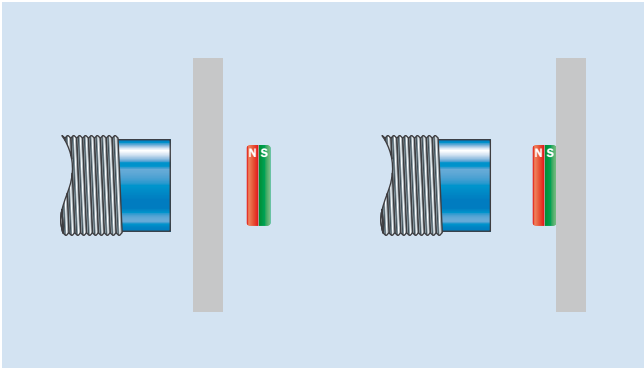

You can find magnetic proximity sensors in ➜ Chapter F

IMPORTANT INFORMATION ABOUT SICK SENSOR SOLUTIONS

From A for Adjustment indicators to W for Wire-break protection, the following pages contain explanations of key terminology in a concise, easy-to-read format. Definitions of all key terms related to innovations and proximity sensor solutions from SICK can be found here. This glossary also provides valuable information about directives and standards such as conformity, protection classes, electrical characteristics and much more.

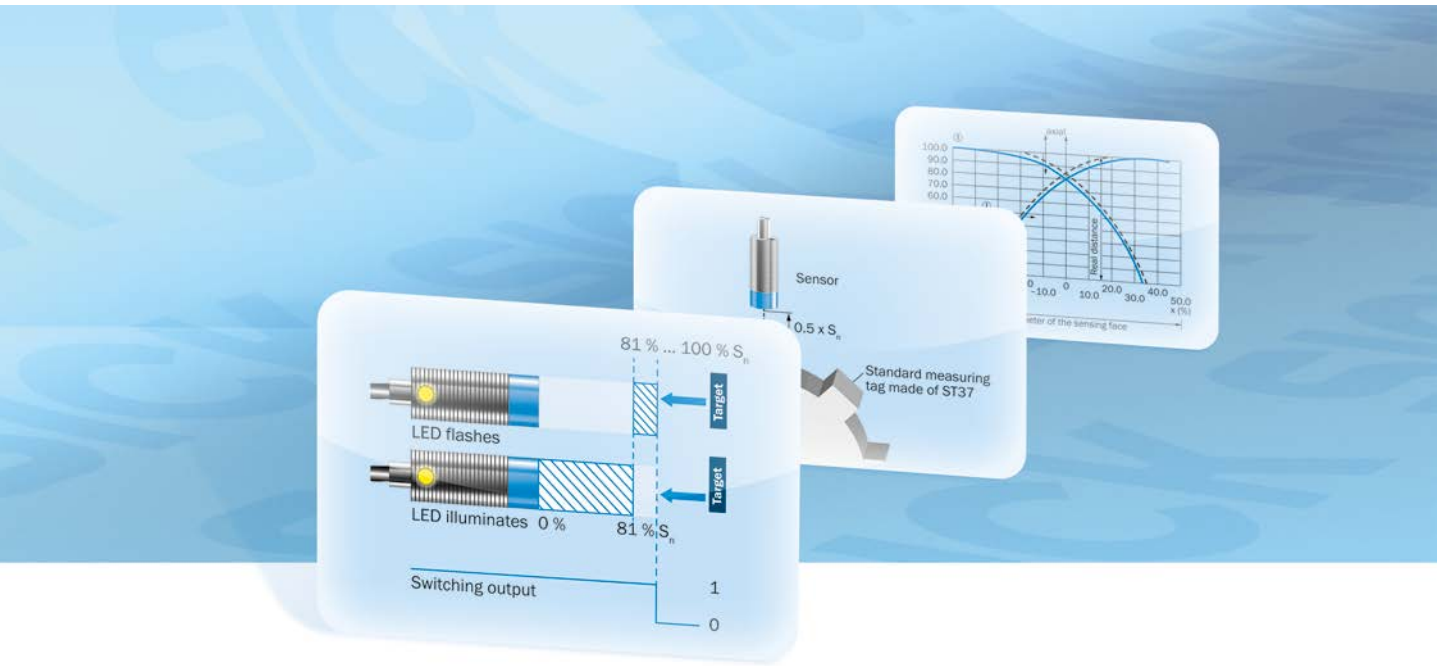

Glossary **J-294**
Explosion protection according to ATEX **J-302**
Index **J-304**

A

Adjustment indicators

The optical adjustment indicator enables fast adjustment of the sensors. The LED indicator flashes in the range 81 – 100 % of the nominal sensing range and in continuous display overflow when it reaches the assured sensing range (81 %).

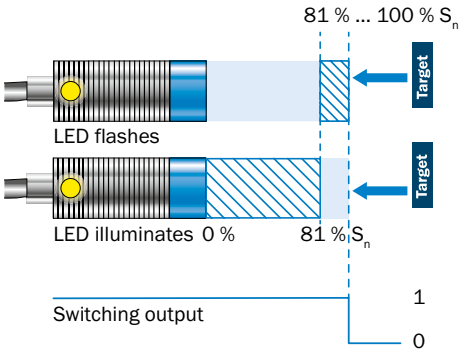

Ambient temperature, operation/storage

The ambient temperature indicates the range within which the proximity sensor works properly.

Assured sensing range

The distance at which a response of the proximity sensor is ensured under the specified temperature, installation and voltage conditions.

ATEX Directive 94/5 EC

➜ **See „Explosion protection according to ATEX“ on page J-302**

B

Bandwidth

The bandwidth describes the highest frequency for periodic sensor operation, where the output signal decreases by not more than 3 dB. Bandwidth is always measured at half sensing range (½ S_n).

C

Coercivity H

The coercive field strength H is the required negative field strength in kA/m (or Oersted Oe) that is necessary to demagnetize a magnet. The higher the value, the better the demagnetization resistance. A distinction is made between BHC and JH0. The coercive field strength JH0 is important for all magnetic materials with small remanence and high coercive field strength (e.g. barium ferrite). JH0 results from the hysteresis loop.

Continuous current Ia

Constant current is defined as the maximum load current for continuous operation.

Current consumption

Power consumption refers to the current consumption of 3 and 4-wire sensors without a load being connected.

E

Electrical wiring

Example connection diagram DC 2-wire:

2-wire, N/O

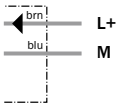

Example connection diagram DC 3-wire:

3-wire PNP, N/O

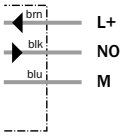

3-wire, NPN, N/C

A proximity sensor with normally closed function is activated in the deactivated state (low resistance) and blocked in the activated state (high impedance).

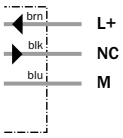

Example connection diagram DC 4-wire:

4-wire, N/C / N/O

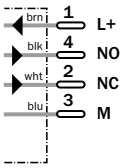

EMC

According to EU directive 2004/108/EC on electromagnetic compatibility, systems and components must satisfy certain properties in order to function smoothly in an electromagnetic environment.

Enable zone

The enable zone defines an area within which the presence of a specific object (e.g. a steel plate) is detected by the sensing face of the sensor and results in the outputs being enabled.

Enclosure rating

The IP enclosure rating indicates the extent of a device's protection against contact with impurities such as dust or water. The code starts with the letters IP (ingress protection) and is followed by the first digit, which is an ascending indicator of the degree of protection against contact and impurities, while the second digit is an indicator of protection against ingress of water:

IP 65: Complete protection against dust and protection against water jets

IP 67: Complete protection against dust and protection against water in 1 m of water for a period of 30 minutes at a constant room temperature

IP 68: Freely definable

IP 69K: Protection against high pressure cleaning according to EN 60529. Jet duration 30 s depending on jet angle 0 - 90° in 30° steps at a water pressure of 80 - 100 bar and a water temperature of 80 ± 5 °C.

➜ See „Fig. Enclosure rating“ on page J-301

Equipment category

➜ See „Explosion protection according to ATEX“ on page J-302

Equipment groups

➜ See „Explosion protection according to ATEX“ on page J-302

EU-type examination certificate

➜ See „Explosion protection according to ATEX“ on page J-302

Explosive groups

➜ See „Explosion protection according to ATEX“ on page J-302

Explosive zone category

➜ See „Explosion protection according to ATEX“ on page J-302

External teach-in

Allows the user to make the required settings via the control cable of the sensor.

H

Hysteresis

Hysteresis describes the difference between the activation and deactivation point of the sensor based on target's axial approach to the active sensor area. The hysteresis is defined as a percentage of the real S_r sensing range.

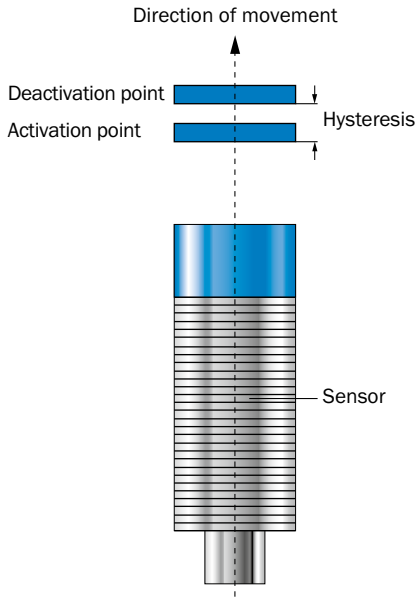

I

Ignition protection type

➜ See „Explosion protection according to ATEX“ on page J-302

Installation in metal

Flush

Flush proximity sensors can be mounted with the sensing face flush in an activated material. Flush proximity sensors can also be installed non-flush.

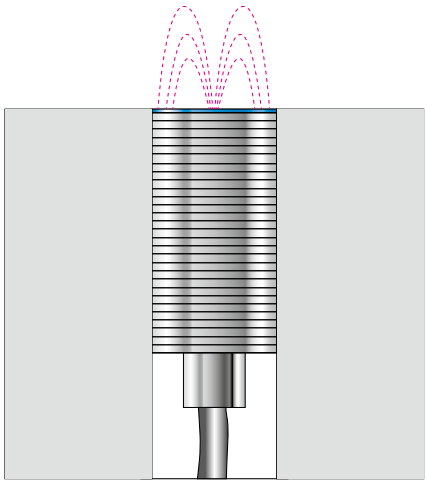

Non-flush

A non-flush proximity sensor requires free space around the sensing face, in which there should be no activated material. The size of the space is type specific. The sensing range is greater than with flush versions.

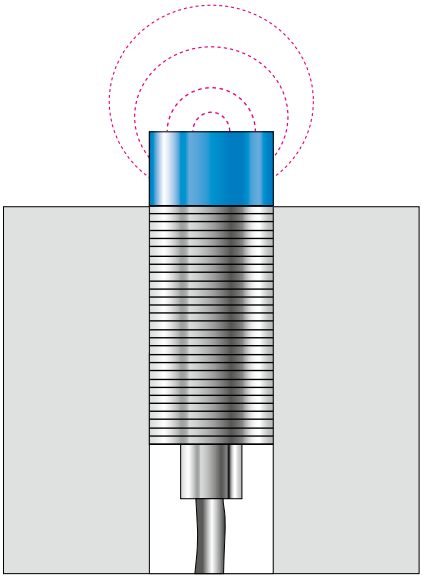

Quasi-flush

A quasi-flush proximity sensor requires free space around the sensing face, in which there should be no activated material. The size of the space is type specific. Although these sensors look identical to flush sensors, they may not be completely incorporated in metal.

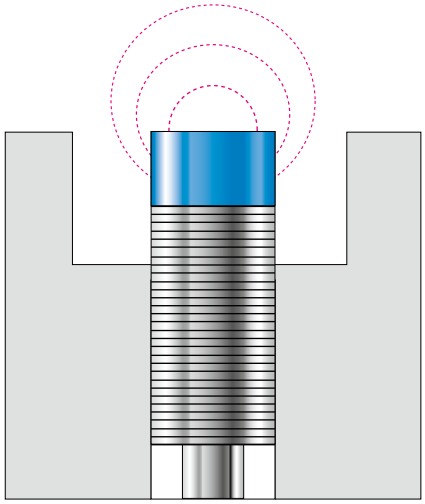

L

Lateral approach

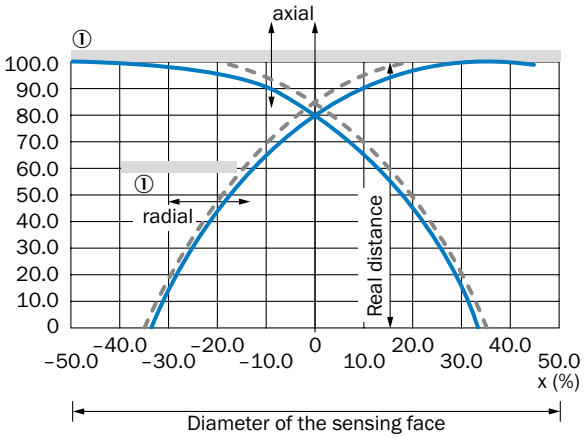

① Standard measuring plate
Switching point
Hysteresis

Lowest operating current Im

➜ See „Minimum load current“ on page J-297

M

Magnetic alignment
Responds to magnet field lines that only act on the sensor through the front of the housing (axial axis).

Max. tightening torque
The maximum allowable force that can be used when turning of a thread without damaging the thread. For sensors with cylindrical design, it prevents overextending the sensor housing.

Minimum load current
Describes the smallest current which is required for self-supply of 2-wire sensors to function in the switched-on state.

N

NAMUR
Standardization association for measurement and control.

No load current
➜ **See „Current consumption“ on page J-294**

Nominal sensitivity
➜ **See „Response sensitivity“ on page J-298**

O

Off-state current
Describes the current flowing in the blocked state in the load circuit of the proximity sensor.

Output current
The current for analog devices, which is present at the output and varies depending on the distance (between target and sensor) (e.g. in a range of 4 - 20 mA).

Output function

Normally open

A proximity sensor's output with N/O function is energized when a target is detected, and de-energized when no target is detected.

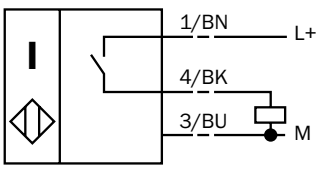

Normally closed

A proximity sensor's output with N/C function is de-energized when a target is detected, and energized when no target is detected.

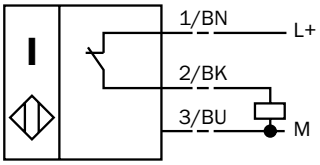

Complementary output

Both an N/O and N/C signal are available simultaneously to a proximity sensor with complementary function. In the deactivated state, pin 2 is activated (low) and pin 4 is blocked (high impedance). In the activated state, pin 2 is blocked (high impedance) and pin 4 is activated (low).

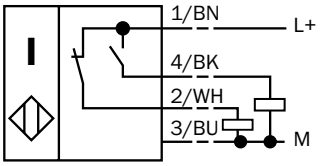

Programmable

A proximity sensor with programmable function can, depending on the type, provide N/O or N/C function and can sometimes even implement PNP or NPN outputs. The type of programming is dependent on the particular type of sensor and can be found in the operating instruction.

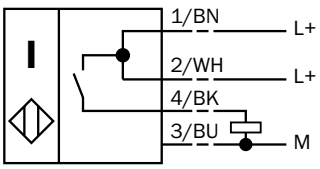

Output voltage
The voltage for analog devices, which is present at the output and varies depending on the distance (between target and sensor) (e.g. in a range of 0 - 10 V).

P

Power consumption, activated
➜ **See „NAMUR“ on page J-297**

Power consumption, deactivated
➜ **See „NAMUR“ on page J-297**

Power-up pulse protection
The power-up pulse protection is used to suppress missing pulses at the output in the time between application of the supply voltage and oscillation of the oscillator.

Protection class

Electrical equipment is classified in relation to existing safety measures for prevention of electric shocks. Protection classes are defined in DIN EN 61140. There are four protection classes ranging from “Basic insulation” (Class 0) to “Safety extra-low voltage (Class 1), double insulation (Class 2), safety transformer” (Class 3).

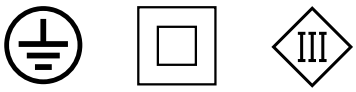

Links: Protection class 1; middle: Protection class 2; right: Protection class 3

R

Rated sensing range

➜ **See „Sensing range Sn“ on page J-298**

Real sensing range S_r

The sensing range of an individual proximity switch that is measured at a specified voltage, defined installation conditions and a temperature of 23 ± 5 °C.

Reduction factor R_m

When using targets made of a material that does not meet the requirements of the standard target, the sensing range is reduced based on the material used. This behavior is described by the reduction factor.

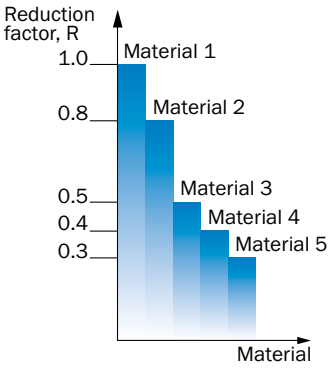

Remanence Br

The remanence Br is specified in tesla (T) or millitesla (mT), in the CGS measuring system in gauss (G). The remanence is the remaining magnetization in a magnet or flux density, which has been magnetized in a closed circuit to saturation.

Repeatability

The repeatability describes the percentage deviation of the switching point. It is measured over a period of eight hours at an ambient temperature of 23 ± 5 °C, relative humidity up to 90 % and a fixed supply voltage of 24 V DC for DC devices or 230 V AC for AC devices.

The difference between any two measurements shall not exceed 10% of the real sensing range (S_r).
This definition applies only for sensors with switching output stage.

Reproducibility

➜ **See „Repeatability“ on page J-298**

Residual ripple

Residual ripple is defined as the superimposed AC component (maximum allowable peak, expressed as a % of U_V) of the DC supply voltage (typically 10 %).

Resolution

The resolution describes the smallest possible change that can be detected by the sensor.

Response sensitivity

Represents the strength of the magnet field in mT (millitesla), which is necessary to activate the sensor. Sensors with high response sensitivity can detect even weak magnetic fields.

Reverse polarity protection

Reverse polarity protection is protection built into a proximity sensor against damage caused by mixing supply voltage connections.

S

Safe switch off distance S_{ar}

The distance from the sensing face of the sensor out of which the absence of a specific object is properly detected while taking into consideration all specified ambient conditions.

Sensing face

The sensing face of a proximity sensor is defined as the area covered by the sensing range. It is also the area over which the sensor responds to the approach of activated material through an output state change.

Sensing range S_n

The distance at which the sensing face axially approaching standard target triggers a signal change. Manufacturing deviations and external factors are not considered.

Sensing range S_r

➜ **See „Real sensing range Sr“ on page J-298**

Shock resistance

According to IEC 60068-2-27
6 shocks (six separate tests) are executed in each direction along three mutually perpendicular axes:

Pulse shape:	half sine
Acceleration:	≤ 30 g
Pulse duration:	11 ms

Short-circuit protection

Short-circuit protection protects against overload and a direct short circuit. After exceeding the trigger threshold, the output is disabled. Then it is periodically (pulsed) queried whether the short circuit persists. After eliminating the short-circuit, the output is switched on again.

Short-time withstand current

Describes the current, which can temporarily push the sensor in the load circuit, without the sensor being destroyed.

Supply voltage

The supply voltage describes the voltage range within which the proximity sensor works properly.

Switching frequencies

➜ **See „Switching sequence“ on page J-299**

Switching output

A switching output is the output via which the output state of the sensor is digitally outputted.

NPN output

The negative potential is here connected to the load. This output is also referred to as negative switching or current-sinking.

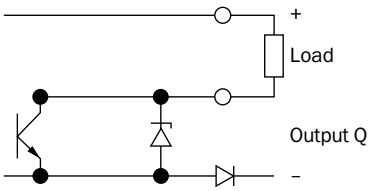

PNP output

The positive potential here is connected to the load. This output is also known as current sourcing or positive switching.

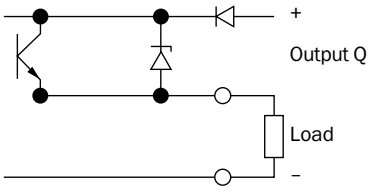

Switching sequence

The switching sequence is defined as the maximum number of switching from the activated state to the deactivated state in hertz. It is measured using a half sensing range (½ S_n) and a standard target. The measurement value shall be satisfied if either the on-time (t1) or off-time (t2) is less than 50 microseconds.

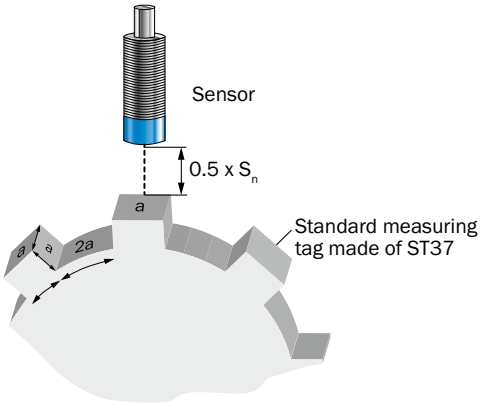

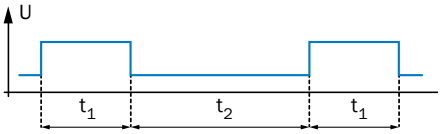

T

Teach-in

➜ **See „External teach-in“ on page J-295**

Temperature classes

➜ **See „Explosion protection according to ATEX“ on page J-302**

Temperature drift (from S_r)

Temperature drift is the shifting of the sensing range or the output signal caused by a change in ambient temperature.

Time delay before availability

The time delay before availability is the time it takes for the proximity sensor to be ready according to the supply voltage.

V

Vibration resistance

According to IEC 60068-2-6
The test shall be conducted in three mutually perpendicular axes under the following conditions:
Frequency range: 10 to 55 Hz
Amplitude: 1 mm
Oscillation period: 5 min
Duration of the service life at resonance frequency or at 55 Hz: 30 min on each axis.

Voltage drop

Voltage drop is defined as the voltage loss that occurs with maximum continuous current Ia across the switching stage of the proximity switch. In particular, this behavior is observed in the series connection.

W

Wire-break protection

Due to a wire-break protection, the output remains locked if the supply cable breaks. Malfunctions are thereby prevented.

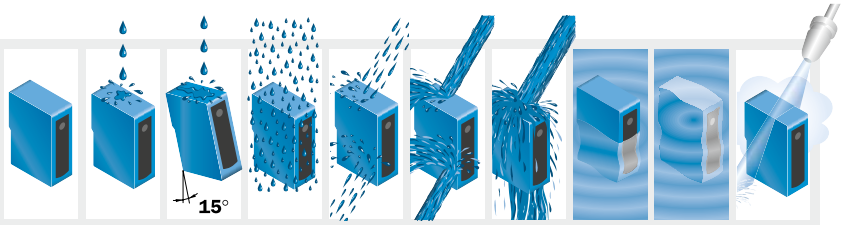

2nd digit: Protection against ingress of water										
1st digit: Protection against ingress of foreign bodies	No protection	Drip-water vertical	tilted	Spray water	Splash water	Jet water	Strong jet of water	Temporary immersion	Lasting immersion	100 bar, 16 l/min., 80 °C
IEC 529 DIN 40050	**IP...0**	**IP...1**	**IP...2**	**IP...3**	**IP...4**	**IP...5**	**IP...6**	**IP...7**	**IP...8**	**IP...9K**
IP 0... No protection	IP 00									
IP 1... Size of foreign body: ≥ 50 mm Ø	IP 10	IP 11	IP 12							
IP 2... Size of foreign body: ≥ 12 mm Ø	IP 20	IP 21	IP 22	IP 23						
IP 3... Size of foreign body: ≥ 2.5 mm Ø	IP 30	IP 31	IP 32	IP 33	IP 34					
IP 4... Size of foreign body: ≥ 1 mm Ø	IP 40	IP 41	IP 42	IP 43	IP 44					
IP 5... Dust-protected	IP 50			IP 53	IP 54	IP 55	IP 56			
IP 6... Dust-proof	IP 60					IP 65	IP 66	IP 67		IP 69K

Fig. Enclosure rating

Explosion protection according to ATEX

ATEX Directive 94/9

The directive 94/9/EC has created in the European Union the framework for approximation of the laws of the Member States concerning equipment and protective systems for intended use in potentially explosive atmospheres. Generally called ATEX (for "Atmosphère explosible"), this directive was implemented in Germany with the 11th Ordinance of the Equipment and Product Safety Act ("Explosion Protection Regulation"/11th GPSGV). Thus, there exist detailed rules for the marketing of new equipment and protective systems for use in explosion-hazardous area. In accordance with the regulations of the directive, products are classified into equipment groups and categories.

Equipment groups

Equipment group I

Encompasses equipment for use in underground mining including surface equipment.

Equipment group II

Encompasses equipment for use in surface operations and is subdivided into categories 1 - 3.

Categories and criteria

Category 1 – Very high safety measures

Equipment for use in areas (zones) in which explosive atmospheres are present continuously, long-term or frequently. Even for rarely occurring problems, explosion protection must be guaranteed. This category corresponds to Zones 0 for gases, vapors and mists, as well as 20 for dust environments, where explosive atmosphere occurs continuously, long-term or frequently in form of a cloud of combustible dust in the air. The conditions of Zones 0 and 20 might also occur inside boxes, pipe lines and equipment.

Category 2 – High safety measures

Equipment for use in areas (zones) in which explosive atmospheres only occasionally occur. Explosion protection must also be guaranteed for frequently occurring equipment problems. This category corresponds to Zones 1 for gases, vapors and mists, as well as 21 for dust environments, where explosive atmosphere occurs occasionally in form of a cloud of combustible dust in the air under normal operation. This zone can, for example, include areas in the immediate vicinity of e.g. powder filling and emptying points and areas where dust deposits occur and in normal operation give rise occasionally to an explosive concentration of combustible dust when mixed with air.

Category 3 – Normal safety measures

Equipment for use in areas (zones) in which explosive atmospheres are not expected to occur. However, in the event that an explosive atmosphere does occur, it occurs only very rarely and only temporarily. Under normal operation, category 3 equipment must guarantee the required safety measures. The corresponding zones are Zone 2 for gases, vapors and mists, as well as 22 for areas in which under normal operation it not expected that an explosive atmosphere in the form of a cloud of combustible dust in air occurs and if it does, then only briefly. This can include areas around dust containing instruments, protective systems and components in which dust can escape due to lack of tightness and cause dust deposits.

Equipment group II						
Equipment for use in other explosion-hazardous area						
	Category 1		Category 2		Category 3	
Danger	Constant, frequent or over a long period		Occasional		Seldom and over a short period	
Requirement	Very high safety		High safety		Normal safety	
Zone	Zone 0	Zone 20	Zone 1	Zone 21	Zone 2	Zone 22
Substance group	G	D	G	D	G	D

G = Gas, D= Dust.

Certificate

After a test body for a device has ensured compliance with the basic safety requirements, it generates a test report. This test report is the basis for a certificate authority (notified body) to issue an EU-type examination certificate.
The CE and ATEX symbols may only be attached to the product when yet another certificate of a notified body per Directive 97/9 concerning the quality assurance of the production of the products has also been granted for the corresponding product group and when the manufacturer has issued a conformity declaration concerning the conformity of the products with the construction type treated in the EU-type examination certificate.

Principles of explosion protection

To establish uniform standards in the determination of protective measures, flammable liquids and gases are divided into explosion groups and temperature classes based on their explosion-relevant properties.

Explosive groups

Gases and vapors are classified into three explosive groups (IIA, IIB and IIC) based on their specific flammability. The danger increases from explosion group IIA to IIC (the higher IIC explosion group always includes the lower IIB and IIA groups).

Temperature classes

To facilitate the planning of an installation, 6 temperature classes (T1 to T6) have been established for the approved surface temperatures. Depending on their respective ignition temperatures, certain flammable gases and vapors can be classified under these temperature classes. For the temperature classes, the following maximum allowable surface temperatures are valid for equipment (the higher temperature classes encompass the lower classes, e.g. T6 includes the lower temperature classes T5 to T1):

Class	Max. surface temperature		
T1	450 °C	T4	135 °C
T2	300 °C	T5	100 °C
T3	200 °C	T6	85 °C

Ignition protection type

Technical means must be used to ensure that no ignition source can take effect according to the classification of a given explosive mixture (gap width, temperature class). There are several technical possibilities to achieve explosion protection of an electrical device. The types of ignition protection are listed in the table. On the explosive identification label of a device, the type of ignition protection accorded to the device is indicated by the initial letters of the type of ignition protection.

Ignition protection type	Description
Flameproof Encapsulation d (drive enclosure)	The components that could trigger ignition are installed in an housing that withstands the explosion pressure. The openings of the housing are designed such that an outward transmission of the explosion is prevented.
Enhanced safety e (enhanced safety)	The development of sparks, electric arcs, or impermissible temperatures that could function as a source of ignition, is prevented by additional measures and an increased degree of safety.
Pressurized apparatus p (pressurization, purging)	The housing of the devices is filled with a protective gas. An excess pressure is maintained so that an explosive gas mixture cannot reach the possible ignition sources arranged in the interior of the housing. If necessary, gas flows continuously through the housing.
Intrinsic safety i (intrinsic safety)	The supply of the electric equipment is led through a safety barrier that limits current and voltage to such an extent that the minimum ignition energy and ignition temperature of an explosive mixture is not reached.
Oil immersion o (oil immersion)	The parts of the electric equipment from which an ignition can arise are immersed in a protective liquid (mostly oil).
Sand encasing q (quartz filled)	The equipment is filled with fine-grained sand. A possible electric arc is cooled so much that the ignition of an explosive mixture is impossible. The surface temperature must not exceed the limit value.
Molded encapsulation m (molded)	The parts of the electric equipment that can create ignition sources are embedded in casting compound so that an electric arc cannot pass through to an explosive mixture outside the casing.
Ignition protection methods n (non-incendive, non-sparking)	In normal operation and with defined errors, there is no risk of ignition from the electric equipment.

All data without guarantee

Type	Part no.	Page
BEF-EA-CM30	2043770	→ H-259
BEF-GH-MINI01	2023160	→ H-259
BEF-KH-M08	2051477	→ H-260
BEF-KH-M12	2051479	→ H-260
BEF-KH-M18	2051481	→ H-260
BEF-KHF-M08	2051478	→ H-260
BEF-KHF-M12	2051480	→ H-260
BEF-KHF-M18	2051482	→ H-260
BEF-KHS-H01	2022465	→ H-258
BEF-KHS-KH3	5322626	→ H-258
BEF-KHS-KH3N	5322627	→ H-258
BEF-KHS-N05	2051611	→ H-258
BEF-KHS-N05N	2051621	→ H-258
BEF-KHS-N06	2051612	→ H-258
BEF-KHS-N06N	2051622	→ H-258
BEF-KHS-N10	2062372	→ H-258
BEF-KHS-N10N	2062373	→ H-258
BEF-KHS-N11N	2071081	→ H-258
BEF-MS12G-A	4056054	→ H-258
BEF-MS12G-B	4056055	→ H-258
BEF-MS12G-NA	4058914	→ H-258
BEF-MS12G-NB	4058915	→ H-258
BEF-MS12L-A	4056052	→ H-258
BEF-MS12L-B	4056053	→ H-258
BEF-MS12L-NA	4058912	→ H-258
BEF-MS12L-NB	4058913	→ H-258
BEF-MS12Z-A	4056056	→ H-258
BEF-MS12Z-B	4056057	→ H-258
BEF-MS12Z-NA	4058916	→ H-258
BEF-MS12Z-NB	4058917	→ H-258
BEF-RMC-D12	5321878	→ H-258
BEF-W4-A	2051628	→ H-259
BEF-W4-B	2051630	→ H-259
BEF-WG-M08	5321722	→ H-258
BEF-WG-M12	5321869	→ H-259
BEF-WG-M12N	5320950	→ H-259
BEF-WG-M18	5321870	→ H-259
BEF-WG-M18N	5320948	→ H-259
BEF-WG-M30	5321871	→ H-259
BEF-WN-M08	5321721	→ H-258
BEF-WN-M12	5308447	→ H-259
BEF-WN-M12N	5320949	→ H-259
BEF-WN-M18	5308446	→ H-259
BEF-WN-M18-ST02	5312973	→ H-259
BEF-WN-M18N	5320947	→ H-259
BEF-WN-M30	5308445	→ H-259
CM12-08EBP-KC1	6051030	→ E-208
CM12-08EBP-KW1	6051029	→ E-208
CM18-08BNP-EC1	6058147	→ E-208
CM18-08BNP-EW1	6058146	→ E-208
CM18-08BNP-TW0	6026194	→ E-216
CM18-08BPP-EC1	6058145	→ E-208
CM18-08BPP-EW1	6058144	→ E-208
CM18-08BPP-TW0	6026195	→ E-216

Type	Part no.	Page
CM18-12NNP-EC1	6058151	→ E-209
CM18-12NNP-EW1	6058150	→ E-209
CM18-12NPP-EC1	6058149	→ E-209
CM18-12NPP-EW1	6058148	→ E-209
CM30-16BNP-EC1	6058155	→ E-209
CM30-16BNP-EW1	6058154	→ E-209
CM30-16BPP-EC1	6058153	→ E-209
CM30-16BPP-EW1	6058152	→ E-209
CM30-25NNP-EC1	6058159	→ E-209
CM30-25NNP-EW1	6058158	→ E-209
CM30-25NPP-EC1	6058157	→ E-209
CM30-25NPP-EW1	6058156	→ E-209
CQ28-10NNP-KW1	6030133	→ E-220
CQ28-10NPP-KW1	6030132	→ E-220
CQ35-25NNP-KC1	6021464	→ E-221
CQ35-25NNP-KW1	6021463	→ E-221
CQ35-25NPP-KC1	6020479	→ E-221
CQ35-25NPP-KW1	6020478	→ E-221
CQ4-08ENOKP1	6051003	→ E-220
CQ4-08ENOKT1	6051007	→ E-220
CQ4-08ENOKU1	6051012	→ E-220
CQ4-08ENSKP1	6051002	→ E-220
CQ4-08ENSKT1	6051006	→ E-220
CQ4-08ENSKU1	6051011	→ E-220
CQ4-08EPOKP1	6051001	→ E-220
CQ4-08EPOKT1	6051005	→ E-220
CQ4-08EPOKU1	6051010	→ E-220
CQ4-08EPSKP1	6051000	→ E-220
CQ4-08EPSKT1	6051004	→ E-220
CQ4-08EPSKU1	6051009	→ E-220
DOL-0803-G01MC	6036455	→ H-267
DOL-0803-G02M	6010785	→ H-267
DOL-0803-G02MC	6025888	→ H-267
DOL-0803-G02MRN	6058504	→ H-267
DOL-0803-G03MC	6038991	→ H-267
DOL-0803-G05M	6022009	→ H-267
DOL-0803-G05MC	6025889	→ H-267
DOL-0803-G05MRN	6058505	→ H-267
DOL-0803-G10M	6022011	→ H-267
DOL-0803-G10MC	6025890	→ H-267
DOL-0803-G10MRN	6058506	→ H-267
DOL-0803-G15M	6036472	→ H-267
DOL-0803-G20MC	6036456	→ H-267
DOL-0803-L02MC	6039080	→ H-267
DOL-0803-L02MRN	6058787	→ H-267
DOL-0803-L05MRN	6058788	→ H-267
DOL-0803-L10MRN	6058789	→ H-267
DOL-0803-W02M	6008489	→ H-267
DOL-0803-W02MC	6025891	→ H-267
DOL-0803-W02MRN	6058507	→ H-267
DOL-0803-W05M	6022010	→ H-267
DOL-0803-W05MC	6025892	→ H-267
DOL-0803-W05MRN	6058508	→ H-267
DOL-0803-W10M	6022012	→ H-267

Type	Part no.	Page
DOL-0803-W10MC	6025893	→ H-267
DOL-0803-W10MRN	6058509	→ H-267
DOL-0803-W15M	6036473	→ H-267
DOL-1204-G02M	6009382	→ H-268
DOL-1204-G02MC	6025900	→ H-268
DOL-1204-G02MNI	6052613	→ H-269
DOL-1204-G02MRN	6058291	→ H-269
DOL-1204-G05M	6009866	→ H-268
DOL-1204-G05MA	6042100	→ H-268
DOL-1204-G05MC	6025901	→ H-268
DOL-1204-G05MNI	6052615	→ H-269
DOL-1204-G05MRN	6058476	→ H-269
DOL-1204-G10M	6010543	→ H-268
DOL-1204-G10MAC	6041797	→ H-269
DOL-1204-G10MC	6025902	→ H-268
DOL-1204-G10MNI	6052617	→ H-269
DOL-1204-G10MRN	6058478	→ H-269
DOL-1204-G15M	6010753	→ H-268
DOL-1204-G15MC	6034749	→ H-268
DOL-1204-G20M	6034401	→ H-268
DOL-1204-G20MC	6034750	→ H-268
DOL-1204-G25MC	6034751	→ H-268
DOL-1204-G25MNI	6052619	→ H-269
DOL-1204-G25MRN	6058480	→ H-269
DOL-1204-L02M	6027945	→ H-268
DOL-1204-L02MC	6039086	→ H-268
DOL-1204-L02MNI	6052621	→ H-269
DOL-1204-L02MRN	6058482	→ H-269
DOL-1204-L05M	6027944	→ H-268
DOL-1204-L05MC	6020398	→ H-268
DOL-1204-L05MNI	6052622	→ H-269
DOL-1204-L05MRN	6058483	→ H-269
DOL-1204-L10M	6027946	→ H-268
DOL-1204-L10MC	6039088	→ H-268
DOL-1204-L10MNI	6052623	→ H-269
DOL-1204-L10MRN	6058484	→ H-269
DOL-1204-L25MNI	6052624	→ H-269
DOL-1204-L25MRN	6058485	→ H-269
DOL-1204-W02M	6009383	→ H-268
DOL-1204-W02MC	6025903	→ H-269
DOL-1204-W02MNI	6052614	→ H-269
DOL-1204-W02MRN	6058474	→ H-269
DOL-1204-W05M	6009867	→ H-268
DOL-1204-W05MA	6042098	→ H-268
DOL-1204-W05MC	6025904	→ H-269
DOL-1204-W05MD	6020399	→ H-268
DOL-1204-W05MNI	6052616	→ H-269
DOL-1204-W05MRN	6058477	→ H-269
DOL-1204-W10M	6010541	→ H-268
DOL-1204-W10MC	6025905	→ H-269
DOL-1204-W10MNI	6052618	→ H-269
DOL-1204-W10MRN	6058479	→ H-269
DOL-1204-W15M	6036474	→ H-268
DOL-1204-W15MC	6034752	→ H-269

Type	Part no.	Page
DOL-1204-W20M	6033559	→ H-268
DOL-1204-W20MC	6034753	→ H-269
DOL-1204-W25MC	6034754	→ H-269
DOL-1204-W25MNI	6052620	→ H-269
DOL-1204-W25MRN	6058481	→ H-269
DOL-1205-G02MRN	6058494	→ H-270
DOL-1205-G05MRN	6058495	→ H-270
DOL-1205-G10MRN	6058496	→ H-270
DOL-1205-G25MRN	6058497	→ H-270
DOS-0803-G	7902077	→ H-271
DOS-0803-W	7902078	→ H-271
DOS-0804-G	6009974	→ H-272
DOS-0804-W	6009975	→ H-272
DOS-1204-G	6007302	→ H-272
DOS-1204-GN	6028357	→ H-272
DOS-1204-GQU6	6042088	→ H-272
DOS-1204-GQU8	6053328	→ H-272
DOS-1204-GX	6026528	→ H-272
DOS-1204-W	6007303	→ H-272
DOS-1204-WN	6028358	→ H-272
DOS-1204-WX	6025570	→ H-272
DOS-1205-G	6009719	→ H-272
DOS-1205-W	6009720	→ H-272
DSL-0803-G01MC	6029405	→ H-270
DSL-0803-G02MC	6029406	→ H-270
DSL-0803-G03MC	6037696	→ H-270
DSL-0803-G05MC	6032730	→ H-270
DSL-0803-G10MC	6032731	→ H-270
DSL-0803-G1M5C	6037695	→ H-270
DSL-0803-G20MC	6035805	→ H-270
DSL-0803-G2M5C	6035951	→ H-270
DSL-1204-B02MRN	6058502	→ H-271
DSL-1204-B05MRN	6058503	→ H-271
DSL-1204-G02M	6022567	→ H-271
DSL-1204-G02MRN	6058499	→ H-271
DSL-1204-G05M	6022569	→ H-271
DSL-1204-G05MC	6033245	→ H-271
DSL-1204-G05MRN	6058500	→ H-271
DSL-1204-G10MC	6033698	→ H-271
DSL-8203-G02M	6022572	→ H-271
DSL-8203-G02MC	6025915	→ H-270
DSL-8203-G05M	6027943	→ H-271
DSL-8203-G05MC	6030608	→ H-270
DSL-8203-G0M6	6022570	→ H-271
EN2-2EX1	6041096	→ H-280
EN2-2EX3	6041095	→ H-281
IH03-01BNSVR8K	6058026	→ C-36
IH03-01BNSVU2K	6058024	→ C-36
IH03-01BPSVR8K	6058027	→ C-36
IH03-01BPSVU2K	6058025	→ C-36
IH03-0B6NS-VU1	6020142	→ C-42
IH03-0B6PO-VU1	6020143	→ C-42
IH03-0B6PS-VR1	6038602	→ C-42
IH03-0B6PS-VU1	6020141	→ C-42

Type	Part no.	Page
IH04-0B8NS-VT1	6020152	→ C-43
IH04-0B8NS-VW1	6020149	→ C-43
IH04-0B8PS-VR1	6045178	→ C-43
IH04-0B8PS-VT1	6020114	→ C-43
IH04-0B8PS-VW1	6020113	→ C-43
IH06-02BNS-VT1	7900180	→ C-44
IH06-02BNS-VTK	6025878	→ C-44
IH06-02BNS-VW1	7900178	→ C-44
IH06-02BNS-VWK	6025875	→ C-44
IH06-02BPO-VT1	1016857	→ C-44
IH06-02BPO-VTK	6025879	→ C-44
IH06-02BPS-VT1	7900179	→ C-44
IH06-02BPS-VTK	6025877	→ C-44
IH06-02BPS-VW1	7900177	→ C-44
IH06-02BPS-VWK	6025874	→ C-44
IH06-04NNS-VTK	6025883	→ C-44
IH06-04NNS-VW1	7900182	→ C-44
IH06-04NNS-VWK	6025881	→ C-44
IH06-04NPO-VTK	6025884	→ C-44
IH06-04NPS-VT1	7900183	→ C-44
IH06-04NPS-VTK	6025882	→ C-44
IH06-04NPS-VW1	7900181	→ C-44
IH06-04NPS-VWK	6025880	→ C-44
IH06-1B5NS-VTK	6020170	→ C-36
IH06-1B5NS-VWK	6020166	→ C-36
IH06-1B5PO-VTK	6020171	→ C-36
IH06-1B5PO-VWK	6020167	→ C-36
IH06-1B5PS-VTK	6020169	→ C-36
IH06-1B5PS-VWK	6020165	→ C-36
IHP03-0B8NSVU2K	6058032	→ C-36
IHP03-0B8PSVU2K	6058033	→ C-36
IM04-01BNSVR8K	6058030	→ C-36
IM04-01BNSVU2K	6058028	→ C-36
IM04-01BPSVR8K	6058031	→ C-36
IM04-01BPSVU2K	6058029	→ C-36
IM04-0B6NS-ZU1	6020146	→ C-43
IM04-0B6PO-ZU1	6020147	→ C-43
IM04-0B6PS-ZR1	6042085	→ C-43
IM04-0B6PS-ZU1	6020145	→ C-43
IM05-0B8NO-ZW1	6020157	→ C-43
IM05-0B8NS-ZT1	6020158	→ C-43
IM05-0B8NS-ZW1	6020155	→ C-43
IM05-0B8PO-ZT1	6020159	→ C-43
IM05-0B8PS-ZT1	6020110	→ C-43
IM05-0B8PS-ZW1	6011591	→ C-43
IM05-1B5NOVT0S	6049738	→ C-43
IM05-1B5NOVU2S	6049734	→ C-43
IM05-1B5NSVT0S	6049737	→ C-43
IM05-1B5NSVU2S	6049733	→ C-43
IM05-1B5POVT0S	6049740	→ C-43
IM05-1B5POVU2S	6049736	→ C-43
IM05-1B5PSVT0S	6049739	→ C-43
IM05-1B5PSVU2S	6049735	→ C-43
IM08-01B-N-ZW0	6021123	→ C-116

Type	Part no.	Page
IM12-02B-N-ZW0	6021124	→ C-116
IM12-04N-N-ZW0	6021125	→ C-116
IM12-06BNS-NC1	6027573	→ C-110
IM12-06BPO-NC1	6027574	→ C-110
IM12-06BPS-NC1	6027572	→ C-110
IM12-10NNS-NC1	6027576	→ C-110
IM12-10NPS-NC1	6027575	→ C-110
IM18-05B-N-ZW0	6021126	→ C-116
IM18-08N-N-ZW0	6021127	→ C-116
IM18-10BNS-NC1	6027578	→ C-110
IM18-10BPO-NC1	6027579	→ C-110
IM18-10BPS-NC1	6027577	→ C-110
IM18-20NNS-NC1	6027581	→ C-110
IM18-20NPS-NC1	6027580	→ C-110
IM30-10B-N-ZW0	6021128	→ C-116
IM30-15N-N-ZW0	6021129	→ C-116
IM30-20BNS-NC1	6027583	→ C-110
IM30-20BPS-NC1	6027582	→ C-110
IM30-40NNS-NC1	6027585	→ C-110
IM30-40NPS-NC1	6027584	→ C-110
IMA08-04BE3ZC0K	6041782	→ C-123
IMA12-06BE1ZC0S	6056420	→ C-123
IMA12-06BE3ZC0K	6041792	→ C-123
IMA18-10BE1ZC0K	6041793	→ C-123
IMA18-20NE1ZC0K	6041794	→ C-123
IMA30-20BE1ZC0K	6041795	→ C-123
IMA30-40NE1ZC0K	6041796	→ C-123
IMB08-02BDSVT0K	1075583	→ C-78
IMB08-02BDSVT0S	1074348	→ C-78
IMB08-02BDSVU2K	1075585	→ C-78
IMB08-02BDSVU2S	1074354	→ C-78
IMB08-02BNOVC0S	1072676	→ C-89
IMB08-02BNOVT0K	1072693	→ C-88
IMB08-02BNOVT0S	1072591	→ C-89
IMB08-02BNOVU2K	1072700	→ C-88
IMB08-02BNOVU2S	1072686	→ C-89
IMB08-02BNPVC0S	1074352	→ C-89
IMB08-02BNSVC0S	1072675	→ C-89
IMB08-02BNSVT0K	1072762	→ C-88
IMB08-02BNSVT0S	1072590	→ C-89
IMB08-02BNSVU2K	1072699	→ C-88
IMB08-02BNSVU2S	1072685	→ C-89
IMB08-02BPOVC0S	1072674	→ C-89
IMB08-02BPOVT0K	1072692	→ C-88
IMB08-02BPOVT0S	1072589	→ C-89
IMB08-02BPOVU2K	1072698	→ C-88
IMB08-02BPOVU2S	1072684	→ C-89
IMB08-02BPPVC0S	1074349	→ C-89
IMB08-02BPSVC0S	1072673	→ C-89
IMB08-02BPSVT0K	1072691	→ C-88
IMB08-02BPSVT0S	1070168	→ C-89
IMB08-02BPSVU2K	1072697	→ C-88
IMB08-02BPSVU2S	1072683	→ C-89
IMB08-04NDSVT0K	1075584	→ C-78

Type	Part no.	Page
IMB08-04NDSVT0S	1076276	→ C-78
IMB08-04NDSVU2K	1075586	→ C-78
IMB08-04NDSVU2S	1074358	→ C-78
IMB08-04NNOVC0S	1072682	→ C-89
IMB08-04NNOVT0K	1072696	→ C-89
IMB08-04NNOVT0S	1072671	→ C-89
IMB08-04NNOVU2K	1072703	→ C-89
IMB08-04NNOVU2S	1072690	→ C-89
IMB08-04NNPVC0S	1074353	→ C-89
IMB08-04NNSVC0S	1072681	→ C-89
IMB08-04NNSVT0K	1070169	→ C-89
IMB08-04NNSVT0S	1072594	→ C-89
IMB08-04NNSVU2K	1072702	→ C-89
IMB08-04NNSVU2S	1072689	→ C-89
IMB08-04NPOVC0S	1072678	→ C-89
IMB08-04NPOVT0K	1072695	→ C-89
IMB08-04NPOVT0S	1072593	→ C-89
IMB08-04NPOVU2K	1072454	→ C-89
IMB08-04NPOVU2S	1072688	→ C-89
IMB08-04NPPVC0S	1074350	→ C-89
IMB08-04NPSVC0S	1070170	→ C-89
IMB08-04NPSVT0K	1072694	→ C-89
IMB08-04NPSVT0S	1072592	→ C-89
IMB08-04NPSVU2K	1072701	→ C-89
IMB08-04NPSVU2S	1072687	→ C-89
IMB12-04BDSVC0S	1074364	→ C-78
IMB12-04BDSVU2K	1074368	→ C-78
IMB12-04BDSVU2S	1074365	→ C-78
IMB12-04BNOVC0K	1072749	→ C-90
IMB12-04BNOVC0S	1072738	→ C-90
IMB12-04BNOVU2K	1072757	→ C-90
IMB12-04BNOVU2S	1072742	→ C-90
IMB12-04BNPVC0K	1074367	→ C-90
IMB12-04BNPVC0S	1074361	→ C-90
IMB12-04BNSVC0K	1070172	→ C-90
IMB12-04BNSVC0S	1072737	→ C-90
IMB12-04BNSVU2K	1072756	→ C-90
IMB12-04BNSVU2S	1072741	→ C-90
IMB12-04BPOVC0K	1072748	→ C-90
IMB12-04BPOVC0S	1072736	→ C-90
IMB12-04BPOVU2K	1072755	→ C-90
IMB12-04BPOVU2S	1072765	→ C-90
IMB12-04BPPVC0K	1074366	→ C-90
IMB12-04BPPVC0S	1074359	→ C-90
IMB12-04BPSVC0K	1072747	→ C-90
IMB12-04BPSVC0S	1072763	→ C-90
IMB12-04BPSVU2K	1072754	→ C-90
IMB12-04BPSVU2S	1072455	→ C-90
IMB12-08NDSVC0S	1076277	→ C-78
IMB12-08NDSVU2K	1076281	→ C-78
IMB12-08NDSVU2S	1076278	→ C-78
IMB12-08NNOVC0K	1072753	→ C-90
IMB12-08NNOVC0S	1072740	→ C-90
IMB12-08NNOVU2K	1072761	→ C-90

Type	Part no.	Page
IMB12-08NNOVU2S	1072746	→ C-90
IMB12-08NNPVC0K	1076280	→ C-90
IMB12-08NNPVC0S	1074362	→ C-90
IMB12-08NNSVC0K	1072752	→ C-90
IMB12-08NNSVC0S	1072764	→ C-90
IMB12-08NNSVU2K	1072760	→ C-90
IMB12-08NNSVU2S	1072745	→ C-90
IMB12-08NPOVC0K	1072751	→ C-90
IMB12-08NPOVC0S	1072739	→ C-90
IMB12-08NPOVU2K	1072759	→ C-90
IMB12-08NPOVU2S	1072744	→ C-90
IMB12-08NPPVC0K	1076279	→ C-90
IMB12-08NPPVC0S	1074360	→ C-90
IMB12-08NPSVC0K	1072750	→ C-90
IMB12-08NPSVC0S	1070171	→ C-90
IMB12-08NPSVU2K	1072758	→ C-90
IMB12-08NPSVU2S	1072743	→ C-90
IMB18-08BDSVC0S	1074373	→ C-78
IMB18-08BDSVU2K	1074380	→ C-78
IMB18-08BDSVU2S	1074374	→ C-78
IMB18-08BNOVC0K	1072823	→ C-91
IMB18-08BNOVC0S	1072809	→ C-91
IMB18-08BNOVU2K	1072830	→ C-91
IMB18-08BNOVU2S	1072816	→ C-91
IMB18-08BNPVC0K	1074378	→ C-91
IMB18-08BNPVC0S	1074371	→ C-91
IMB18-08BNSVC0K	1070174	→ C-91
IMB18-08BNSVC0S	1072808	→ C-91
IMB18-08BNSVU2K	1072829	→ C-91
IMB18-08BNSVU2S	1072815	→ C-91
IMB18-08BPOVC0K	1072822	→ C-91
IMB18-08BPOVC0S	1072807	→ C-91
IMB18-08BPOVU2K	1072456	→ C-91
IMB18-08BPOVU2S	1072814	→ C-91
IMB18-08BPPVC0K	1074376	→ C-91
IMB18-08BPPVC0S	1074369	→ C-91
IMB18-08BPSVC0K	1072821	→ C-91
IMB18-08BPSVC0S	1072806	→ C-91
IMB18-08BPSVU2K	1072828	→ C-91
IMB18-08BPSVU2S	1072813	→ C-91
IMB18-12NDSVC0S	1076282	→ C-79
IMB18-12NDSVU2K	1076283	→ C-79
IMB18-12NDSVU2S	1074375	→ C-79
IMB18-12NNOVC0S	1072812	→ C-91
IMB18-12NNOVU2K	1072834	→ C-91
IMB18-12NNOVU2S	1072820	→ C-91
IMB18-12NNPVC0K	1074379	→ C-91
IMB18-12NNPVC0S	1074372	→ C-91
IMB18-12NNSVC0K	1072826	→ C-91
IMB18-12NNSVC0S	1072811	→ C-91
IMB18-12NNSVU2K	1072833	→ C-91
IMB18-12NNSVU2S	1072819	→ C-91
IMB18-12NPOVC0K	1072825	→ C-91
IMB18-12NPOVC0S	1072810	→ C-91

Type	Part no.	Page
IMB18-12NPOVU2K	1072832	→ C-91
IMB18-12NPOVU2S	1072818	→ C-91
IMB18-12NPPVC0K	1074377	→ C-91
IMB18-12NPPVC0S	1074370	→ C-91
IMB18-12NPSVC0K	1072824	→ C-91
IMB18-12NPSVC0S	1070173	→ C-91
IMB18-12NPSVU2K	1072831	→ C-91
IMB18-12NPSVU2S	1072817	→ C-91
IMB30-15BDSVC0S	1074410	→ C-79
IMB30-15BDSVU2K	1074420	→ C-79
IMB30-15BDSVU2S	1074413	→ C-79
IMB30-15BNOVC0K	1072851	→ C-92
IMB30-15BNOVC0S	1072837	→ C-92
IMB30-15BNOVU2K	1072858	→ C-92
IMB30-15BNOVU2S	1072844	→ C-92
IMB30-15BNPVC0K	1074417	→ C-92
IMB30-15BNPVC0S	1074408	→ C-92
IMB30-15BNSVC0K	1072850	→ C-92
IMB30-15BNSVC0S	1072836	→ C-92
IMB30-15BNSVU2K	1072857	→ C-92
IMB30-15BNSVU2S	1072843	→ C-92
IMB30-15BPOVC0K	1072849	→ C-92
IMB30-15BPOVC0S	1072835	→ C-92
IMB30-15BPOVU2K	1072856	→ C-92
IMB30-15BPOVU2S	1072842	→ C-92
IMB30-15BPPVC0K	1074406	→ C-92
IMB30-15BPPVC0S	1074411	→ C-92
IMB30-15BPSVC0K	1070176	→ C-92
IMB30-15BPSVC0S	1072602	→ C-92
IMB30-15BPSVU2K	1072457	→ C-92
IMB30-15BPSVU2S	1072841	→ C-92
IMB30-20NDSVC0S	1076291	→ C-79
IMB30-20NDSVU2K	1076284	→ C-79
IMB30-20NDSVU2S	1074414	→ C-79
IMB30-20NNOVC0K	1072855	→ C-92
IMB30-20NNOVC0S	1072840	→ C-92
IMB30-20NNOVU2K	1072862	→ C-92
IMB30-20NNOVU2S	1072848	→ C-92
IMB30-20NNPVC0K	1074418	→ C-92
IMB30-20NNPVC0S	1074409	→ C-92
IMB30-20NNSVC0K	1072854	→ C-92
IMB30-20NNSVC0S	1070175	→ C-92
IMB30-20NNSVU2K	1072861	→ C-92
IMB30-20NNSVU2S	1072847	→ C-92
IMB30-20NPOVC0K	1072853	→ C-92
IMB30-20NPOVC0S	1072839	→ C-92
IMB30-20NPOVU2K	1072860	→ C-92
IMB30-20NPOVU2S	1072846	→ C-92
IMB30-20NPPVC0K	1074416	→ C-92
IMB30-20NPPVC0S	1074407	→ C-92
IMB30-20NPSVC0K	1072852	→ C-92
IMB30-20NPSVC0S	1072838	→ C-92
IMB30-20NPSVU2K	1072859	→ C-92
IMB30-20NPSVU2S	1072845	→ C-92

Type	Part no.	Page
IMC18-07BPDZC0SA05	1061987	→ C-138
IMC30-10BPDZC0SA05	1061704	→ C-138
IME08-02BDOZT0S	1067108	→ C-50
IME08-02BDOZY2S	1068250	→ C-50
IME08-02BDSZT0S	1067109	→ C-50
IME08-02BDSZY2K	1070432	→ C-50
IME08-02BDSZY2S	1068251	→ C-50
IME08-02BNOZT0K	1040881	→ C-59
IME08-02BNOZT0S	1040882	→ C-59
IME08-02BNOZW2K	1040883	→ C-59
IME08-02BNOZW2S	1040884	→ C-59
IME08-02BNSZC0S	1051127	→ C-59
IME08-02BNSZT0K	1040877	→ C-59
IME08-02BNSZT0S	1040878	→ C-59
IME08-02BNSZW2K	1040879	→ C-59
IME08-02BNSZW2S	1040880	→ C-59
IME08-02BPOZC0S	1051207	→ C-59
IME08-02BPOZT0K	1040873	→ C-59
IME08-02BPOZT0S	1040874	→ C-59
IME08-02BPOZW2K	1040875	→ C-59
IME08-02BPOZW2S	1040876	→ C-59
IME08-02BPSZC0S	1051205	→ C-59
IME08-02BPSZT0K	1040869	→ C-59
IME08-02BPSZT0S	1040870	→ C-59
IME08-02BPSZW2K	1040871	→ C-59
IME08-02BPSZW2S	1040872	→ C-59
IME08-03BNOZC0S	1074033	→ C-60
IME08-03BNOZT0K	1074041	→ C-60
IME08-03BNOZT0S	1074026	→ C-60
IME08-03BNOZW2K	1074035	→ C-60
IME08-03BNOZW2S	1074045	→ C-60
IME08-03BNSZC0S	1074031	→ C-60
IME08-03BNSZT0K	1074040	→ C-60
IME08-03BNSZT0S	1073663	→ C-60
IME08-03BNSZW2K	1074009	→ C-60
IME08-03BNSZW2S	1074044	→ C-60
IME08-03BPOZC0S	1074030	→ C-60
IME08-03BPOZT0K	1074038	→ C-60
IME08-03BPOZT0S	1073662	→ C-60
IME08-03BPOZW2K	1074008	→ C-60
IME08-03BPOZW2S	1074043	→ C-60
IME08-03BPSZC0S	1074029	→ C-60
IME08-03BPSZT0K	1074037	→ C-60
IME08-03BPSZT0S	1073457	→ C-60
IME08-03BPSZW2K	1074007	→ C-60
IME08-03BPSZW2S	1074042	→ C-60
IME08-04NDOZT0S	1067197	→ C-50
IME08-04NDOZY2S	1068252	→ C-50
IME08-04NDSZT0S	1067177	→ C-50
IME08-04NDSZY2S	1068253	→ C-50
IME08-04NNOZT0K	1040897	→ C-60
IME08-04NNOZT0S	1040898	→ C-60
IME08-04NNOZW2K	1040899	→ C-60
IME08-04NNOZW2S	1040900	→ C-60

Type	Part no.	Page
IME08-04NNSZT0K	1040893	→ C-60
IME08-04NNSZT0S	1040894	→ C-60
IME08-04NNSZW2K	1040895	→ C-60
IME08-04NNSZW2S	1040896	→ C-60
IME08-04NPOZC0S	1051208	→ C-60
IME08-04NPOZT0K	1040889	→ C-60
IME08-04NPOZT0S	1040890	→ C-60
IME08-04NPOZW2K	1040891	→ C-60
IME08-04NPOZW2S	1040892	→ C-60
IME08-04NPSZC0S	1051209	→ C-60
IME08-04NPSZT0K	1040885	→ C-60
IME08-04NPSZT0S	1040886	→ C-60
IME08-04NPSZW2K	1040887	→ C-60
IME08-04NPSZW2S	1040888	→ C-60
IME08-06NNOZT0K	1071203	→ C-61
IME08-06NNOZT0S	1071211	→ C-61
IME08-06NNOZW2K	1071199	→ C-61
IME08-06NNOZW2S	1071207	→ C-61
IME08-06NNSZT0K	1071202	→ C-61
IME08-06NNSZT0S	1071210	→ C-61
IME08-06NNSZW2K	1071198	→ C-61
IME08-06NNSZW2S	1071206	→ C-61
IME08-06NPOZC0S	1071213	→ C-61
IME08-06NPOZT0K	1071201	→ C-61
IME08-06NPOZT0S	1071209	→ C-61
IME08-06NPOZW2K	1071196	→ C-61
IME08-06NPOZW2S	1071205	→ C-61
IME08-06NPSZC0S	1071212	→ C-61
IME08-06NPSZT0K	1071200	→ C-61
IME08-06NPSZT0S	1071208	→ C-61
IME08-06NPSZW2K	1071195	→ C-61
IME08-06NPSZW2S	1071204	→ C-61
IME08-1B5NOZT0K	1040849	→ C-58
IME08-1B5NOZT0S	1040850	→ C-58
IME08-1B5NOZW2K	1040851	→ C-58
IME08-1B5NOZW2S	1040852	→ C-58
IME08-1B5NSZT0K	1040845	→ C-58
IME08-1B5NSZT0S	1040846	→ C-58
IME08-1B5NSZW2K	1040847	→ C-58
IME08-1B5NSZW2S	1040848	→ C-58
IME08-1B5POZT0K	1040841	→ C-58
IME08-1B5POZT0S	1040842	→ C-58
IME08-1B5POZW2K	1040843	→ C-58
IME08-1B5POZW2S	1040844	→ C-58
IME08-1B5PSZT0K	1040837	→ C-58
IME08-1B5PSZT0S	1040838	→ C-58
IME08-1B5PSZW2K	1040839	→ C-58
IME08-1B5PSZW2S	1040840	→ C-58
IME08-2N5NOZT0K	1040865	→ C-59
IME08-2N5NOZT0S	1040866	→ C-59
IME08-2N5NOZW2K	1040867	→ C-59
IME08-2N5NOZW2S	1040868	→ C-59
IME08-2N5NSZT0K	1040861	→ C-59
IME08-2N5NSZT0S	1040862	→ C-59

Type	Part no.	Page
IME08-2N5NSZW2K	1040863	→ C-59
IME08-2N5NSZW2S	1040864	→ C-59
IME08-2N5POZT0K	1040857	→ C-59
IME08-2N5POZT0S	1040858	→ C-59
IME08-2N5POZW2K	1040859	→ C-59
IME08-2N5POZW2S	1040860	→ C-59
IME08-2N5PSZT0K	1040853	→ C-59
IME08-2N5PSZT0S	1040854	→ C-59
IME08-2N5PSZW2K	1040855	→ C-59
IME08-2N5PSZW2S	1040856	→ C-59
IME12-02BNOZC0K	1040744	→ C-61
IME12-02BNOZC0S	1040743	→ C-61
IME12-02BNOZW2K	1040745	→ C-61
IME12-02BNOZW2S	1040746	→ C-61
IME12-02BNSZC0K	1040739	→ C-61
IME12-02BNSZC0S	1040740	→ C-61
IME12-02BNSZW2K	1040741	→ C-61
IME12-02BNSZW2S	1040742	→ C-61
IME12-02BPOZC0K	1040735	→ C-61
IME12-02BPOZC0S	1040736	→ C-61
IME12-02BPOZW2K	1040737	→ C-61
IME12-02BPOZW2S	1040738	→ C-61
IME12-02BPSZC0K	1040731	→ C-61
IME12-02BPSZC0S	1040732	→ C-61
IME12-02BPSZW2K	1040733	→ C-61
IME12-02BPSZW2S	1040734	→ C-61
IME12-04BDOZC0S	1067200	→ C-50
IME12-04BDOZY2S	1068254	→ C-50
IME12-04BDSZC0S	1067178	→ C-50
IME12-04BDSZQ9S	1068718	→ C-50
IME12-04BDSZY2K	1072274	→ C-50
IME12-04BDSZY2S	1068255	→ C-50
IME12-04BNOZC0K	1040775	→ C-62
IME12-04BNOZC0S	1040776	→ C-62
IME12-04BNOZW2K	1040777	→ C-62
IME12-04BNOZW2S	1040778	→ C-62
IME12-04BNSZC0K	1040771	→ C-62
IME12-04BNSZC0S	1040772	→ C-62
IME12-04BNSZW2K	1040773	→ C-62
IME12-04BNSZW2S	1040774	→ C-62
IME12-04BPOZC0K	1040767	→ C-62
IME12-04BPOZC0S	1040768	→ C-62
IME12-04BPOZW2K	1040769	→ C-62
IME12-04BPSZC0K	1040763	→ C-62
IME12-04BPSZC0S	1040764	→ C-62
IME12-04BPSZW2K	1040765	→ C-62
IME12-04BPSZW2S	1040766	→ C-62
IME12-04NNOZC0K	1040759	→ C-62
IME12-04NNOZC0S	1040760	→ C-62
IME12-04NNOZW2K	1040761	→ C-62
IME12-04NNOZW2S	1040762	→ C-62
IME12-04NNSZC0K	1040755	→ C-62
IME12-04NNSZC0S	1040756	→ C-62
IME12-04NNSZW2K	1040758	→ C-62

Type	Part no.	Page
IME12-04NNSZW2S	1040757	→ C-62
IME12-04NPOZC0K	1040751	→ C-62
IME12-04NPOZC0S	1040752	→ C-62
IME12-04NPOZW2K	1040753	→ C-62
IME12-04NPOZW2S	1040754	→ C-62
IME12-04NPSZC0K	1040747	→ C-62
IME12-04NPSZC0S	1040748	→ C-62
IME12-04NPSZW2K	1040749	→ C-62
IME12-04NPSZW2S	1040750	→ C-62
IME12-06BNOZC0K	1071221	→ C-63
IME12-06BNOZC0S	1071229	→ C-63
IME12-06BNOZW2K	1071217	→ C-63
IME12-06BNOZW2S	1071225	→ C-63
IME12-06BNSZC0K	1071220	→ C-63
IME12-06BNSZC0S	1071228	→ C-63
IME12-06BNSZW2K	1071216	→ C-63
IME12-06BNSZW2S	1071224	→ C-63
IME12-06BPOZC0K	1071219	→ C-63
IME12-06BPOZC0S	1071227	→ C-63
IME12-06BPOZW2K	1071215	→ C-63
IME12-06BPOZW2S	1071223	→ C-63
IME12-06BPSZC0K	1071218	→ C-63
IME12-06BPSZC0S	1071226	→ C-63
IME12-06BPSZW2K	1071214	→ C-63
IME12-06BPSZW2S	1071222	→ C-63
IME12-08NDOZC0S	1067203	→ C-50
IME12-08NDOZY2S	1068256	→ C-50
IME12-08NDSZC0S	1067180	→ C-50
IME12-08NDSZY2S	1068257	→ C-50
IME12-08NNOZC0K	1040791	→ C-63
IME12-08NNOZC0S	1040826	→ C-63
IME12-08NNOZW2K	1040792	→ C-63
IME12-08NNOZW2S	1040793	→ C-63
IME12-08NNSZC0K	1040787	→ C-63
IME12-08NNSZC0S	1040788	→ C-63
IME12-08NNSZW2K	1040789	→ C-63
IME12-08NNSZW2S	1040790	→ C-63
IME12-08NPOZC0K	1040783	→ C-63
IME12-08NPOZC0S	1040784	→ C-63
IME12-08NPOZW2K	1040785	→ C-63
IME12-08NPOZW2S	1040786	→ C-63
IME12-08NPSZC0K	1040779	→ C-63
IME12-08NPSZC0S	1040780	→ C-63
IME12-08NPSZW2K	1040781	→ C-63
IME12-08NPSZW2S	1040782	→ C-63
IME12-10NNOZC0K	1071237	→ C-64
IME12-10NNOZC0S	1071245	→ C-64
IME12-10NNOZW2K	1071233	→ C-64
IME12-10NNOZW2S	1071241	→ C-64
IME12-10NNSZC0K	1071232	→ C-64
IME12-10NNSZC0S	1071244	→ C-64
IME12-10NNSZW2K	1071236	→ C-64
IME12-10NNSZW2S	1071240	→ C-64
IME12-10NPOZC0K	1071235	→ C-64

Type	Part no.	Page
IME12-10NPOZC0S	1071243	→ C-64
IME12-10NPOZW2K	1071231	→ C-64
IME12-10NPOZW2S	1071239	→ C-64
IME12-10NPSZC0K	1071234	→ C-64
IME12-10NPSZC0S	1071242	→ C-64
IME12-10NPSZW2K	1071230	→ C-64
IME12-10NPSZW2S	1071238	→ C-64
IME18-05BNOZC0K	1040945	→ C-64
IME18-05BNOZC0S	1040946	→ C-64
IME18-05BNOZW2K	1040947	→ C-64
IME18-05BNOZW2S	1040948	→ C-64
IME18-05BNSZC0K	1040941	→ C-64
IME18-05BNSZC0S	1040942	→ C-64
IME18-05BNSZW2K	1040943	→ C-64
IME18-05BNSZW2S	1040944	→ C-64
IME18-05BPOZC0K	1040937	→ C-64
IME18-05BPOZC0S	1040938	→ C-64
IME18-05BPOZW2K	1040939	→ C-64
IME18-05BPOZW2S	1040940	→ C-64
IME18-05BPSZC0K	1040933	→ C-64
IME18-05BPSZC0S	1040934	→ C-64
IME18-05BPSZW2K	1040935	→ C-64
IME18-05BPSZW2S	1040936	→ C-64
IME18-08BDOZC0S	1067206	→ C-51
IME18-08BDOZY2S	1068258	→ C-51
IME18-08BDSZC0S	1067207	→ C-51
IME18-08BDSZQ9S	1068719	→ C-51
IME18-08BDSZY2K	1072277	→ C-51
IME18-08BDSZY2S	1068259	→ C-51
IME18-08BNOZC0K	1040977	→ C-65
IME18-08BNOZC0S	1040978	→ C-65
IME18-08BNOZW2K	1040979	→ C-65
IME18-08BNOZW2S	1040980	→ C-65
IME18-08BNSZC0K	1040973	→ C-65
IME18-08BNSZC0S	1040974	→ C-65
IME18-08BNSZW2K	1040975	→ C-65
IME18-08BNSZW2S	1040976	→ C-65
IME18-08BPOZC0K	1040969	→ C-65
IME18-08BPOZC0S	1040970	→ C-65
IME18-08BPOZW2K	1040971	→ C-65
IME18-08BPOZW2S	1040972	→ C-65
IME18-08BPSZC0K	1040965	→ C-65
IME18-08BPSZC0S	1040966	→ C-65
IME18-08BPSZW2K	1040967	→ C-65
IME18-08BPSZW2S	1040968	→ C-65
IME18-08NNOZC0K	1040961	→ C-65
IME18-08NNOZC0S	1040962	→ C-64
IME18-08NNOZW2K	1040963	→ C-65
IME18-08NNOZW2S	1040964	→ C-64
IME18-08NNSZC0K	1040957	→ C-65
IME18-08NNSZC0S	1040958	→ C-64
IME18-08NNSZW2K	1040959	→ C-65
IME18-08NNSZW2S	1040960	→ C-64
IME18-08NPOZC0K	1040953	→ C-65

Type	Part no.	Page
IME18-08NPOZC0S	1040954	→ C-64
IME18-08NPOZW2K	1040955	→ C-65
IME18-08NPOZW2S	1040956	→ C-64
IME18-08NPSZC0K	1040949	→ C-65
IME18-08NPSZW2K	1040951	→ C-65
IME18-08NPSZW2S	1040952	→ C-64
IME18-12BNOZC0K	1071255	→ C-66
IME18-12BNOZC0S	1071263	→ C-66
IME18-12BNOZW2K	1071249	→ C-66
IME18-12BNOZW2S	1071259	→ C-66
IME18-12BNSZC0K	1071254	→ C-66
IME18-12BNSZC0S	1071262	→ C-66
IME18-12BNSZW2K	1071248	→ C-66
IME18-12BNSZW2S	1071258	→ C-66
IME18-12BPOZC0K	1071253	→ C-66
IME18-12BPOZC0S	1071261	→ C-66
IME18-12BPOZW2K	1071247	→ C-66
IME18-12BPOZW2S	1071257	→ C-66
IME18-12BPSZC0K	1071252	→ C-66
IME18-12BPSZC0S	1071260	→ C-66
IME18-12BPSZW2K	1071246	→ C-66
IME18-12BPSZW2S	1071256	→ C-66
IME18-12NDOZC0S	1067222	→ C-51
IME18-12NDOZY2S	1068260	→ C-51
IME18-12NDSZC0S	1067181	→ C-51
IME18-12NDSZY2S	1068261	→ C-51
IME18-12NNOZC0K	1040993	→ C-65
IME18-12NNOZC0S	1040994	→ C-65
IME18-12NNOZW2K	1040995	→ C-65
IME18-12NNOZW2S	1040996	→ C-65
IME18-12NNSZC0K	1040989	→ C-65
IME18-12NNSZC0S	1040990	→ C-65
IME18-12NNSZW2K	1040991	→ C-65
IME18-12NNSZW2S	1040992	→ C-65
IME18-12NPOZC0K	1040985	→ C-65
IME18-12NPOZC0S	1040986	→ C-65
IME18-12NPOZW2K	1040987	→ C-65
IME18-12NPOZW2S	1040988	→ C-65
IME18-12NPSZC0K	1040981	→ C-65
IME18-12NPSZC0S	1040982	→ C-65
IME18-12NPSZW2K	1040983	→ C-65
IME18-12NPSZW2S	1040984	→ C-65
IME18-20NNOZC0K	1071272	→ C-66
IME18-20NNOZC0S	1071280	→ C-66
IME18-20NNOZW2K	1071268	→ C-66
IME18-20NNOZW2S	1071276	→ C-66
IME18-20NNSZC0K	1071271	→ C-66
IME18-20NNSZC0S	1071279	→ C-66
IME18-20NNSZW2K	1071267	→ C-66
IME18-20NNSZW2S	1071275	→ C-66
IME18-20NPOZC0K	1071270	→ C-66
IME18-20NPOZC0S	1071278	→ C-66
IME18-20NPOZW2K	1071265	→ C-66
IME18-20NPOZW2S	1071274	→ C-66

Type	Part no.	Page
IME18-20NPSZC0K	1071269	→ C-66
IME18-20NPSZC0S	1071277	→ C-66
IME18-20NPSZW2K	1071264	→ C-66
IME18-20NPSZW2S	1071273	→ C-66
IME30-10BNOZC0K	1041010	→ C-67
IME30-10BNOZC0S	1041009	→ C-66
IME30-10BNOZW2K	1041011	→ C-67
IME30-10BNOZW2S	1041012	→ C-66
IME30-10BNSZC0K	1041005	→ C-67
IME30-10BNSZC0S	1041006	→ C-66
IME30-10BNSZW2K	1041007	→ C-67
IME30-10BNSZW2S	1041008	→ C-66
IME30-10BPOZC0K	1041001	→ C-67
IME30-10BPOZC0S	1041002	→ C-66
IME30-10BPOZW2K	1041003	→ C-67
IME30-10BPOZW2S	1041004	→ C-66
IME30-10BPSZC0K	1040997	→ C-67
IME30-10BPSZC0S	1040998	→ C-66
IME30-10BPSZW2K	1040999	→ C-67
IME30-10BPSZW2S	1041000	→ C-66
IME30-15BDOZC0S	1067226	→ C-51
IME30-15BDOZY2S	1068263	→ C-51
IME30-15BDSZC0S	1067183	→ C-51
IME30-15BDSZY2K	1072343	→ C-51
IME30-15BDSZY2S	1068264	→ C-51
IME30-15BNOZC0K	1041041	→ C-67
IME30-15BNOZC0S	1041042	→ C-67
IME30-15BNOZW2K	1041043	→ C-67
IME30-15BNOZW2S	1041044	→ C-67
IME30-15BNSZC0K	1041037	→ C-67
IME30-15BNSZC0S	1041038	→ C-67
IME30-15BNSZW2K	1041039	→ C-67
IME30-15BNSZW2S	1041040	→ C-67
IME30-15BPOZC0K	1041033	→ C-67
IME30-15BPOZC0S	1041034	→ C-67
IME30-15BPOZW2K	1041035	→ C-67
IME30-15BPOZW2S	1041036	→ C-67
IME30-15BPSZC0K	1041029	→ C-67
IME30-15BPSZC0S	1041030	→ C-67
IME30-15BPSZW2K	1041031	→ C-67
IME30-15BPSZW2S	1041032	→ C-67
IME30-15NNOZC0K	1041025	→ C-67
IME30-15NNOZC0S	1041026	→ C-67
IME30-15NNOZW2K	1041027	→ C-67
IME30-15NNOZW2S	1041028	→ C-67
IME30-15NNSZC0K	1041021	→ C-67
IME30-15NNSZC0S	1041022	→ C-67
IME30-15NNSZW2K	1041023	→ C-67
IME30-15NNSZW2S	1041024	→ C-67
IME30-15NPOZC0K	1041017	→ C-67
IME30-15NPOZC0S	1041018	→ C-67
IME30-15NPOZW2K	1041019	→ C-67
IME30-15NPOZW2S	1041020	→ C-67
IME30-15NPSZC0K	1041013	→ C-67

Type	Part no.	Page
IME30-15NPSZC0S	1041014	→ C-67
IME30-15NPSZW2K	1041015	→ C-67
IME30-15NPSZW2S	1041016	→ C-67
IME30-20BNOZC0K	1071288	→ C-68
IME30-20BNOZC0S	1071296	→ C-68
IME30-20BNOZW2K	1071284	→ C-68
IME30-20BNOZW2S	1071292	→ C-68
IME30-20BNSZC0K	1071287	→ C-68
IME30-20BNSZC0S	1071295	→ C-68
IME30-20BNSZW2K	1071283	→ C-68
IME30-20BNSZW2S	1071291	→ C-68
IME30-20BPOZC0K	1071286	→ C-68
IME30-20BPOZC0S	1071294	→ C-68
IME30-20BPOZW2K	1071282	→ C-68
IME30-20BPOZW2S	1071290	→ C-68
IME30-20BPSZC0K	1071285	→ C-68
IME30-20BPSZC0S	1071293	→ C-68
IME30-20BPSZW2K	1071281	→ C-68
IME30-20BPSZW2S	1071289	→ C-68
IME30-20NDOZC0S	1067235	→ C-51
IME30-20NDOZY2S	1068266	→ C-51
IME30-20NDSZC0S	1067184	→ C-51
IME30-20NDSZY2S	1068267	→ C-51
IME30-20NNOZC0K	1041057	→ C-68
IME30-20NNOZC0S	1041058	→ C-68
IME30-20NNOZW2K	1041059	→ C-68
IME30-20NNOZW2S	1041060	→ C-68
IME30-20NNSZC0K	1041053	→ C-68
IME30-20NNSZC0S	1041054	→ C-68
IME30-20NNSZW2K	1041055	→ C-68
IME30-20NNSZW2S	1041056	→ C-68
IME30-20NPOZC0K	1041049	→ C-68
IME30-20NPOZC0S	1041050	→ C-68
IME30-20NPOZW2K	1041051	→ C-68
IME30-20NPOZW2S	1041052	→ C-68
IME30-20NPSZC0K	1041045	→ C-68
IME30-20NPSZC0S	1041046	→ C-68
IME30-20NPSZW2K	1041047	→ C-68
IME30-20NPSZW2S	1041048	→ C-68
IME30-38NNOZC0K	1071304	→ C-69
IME30-38NNOZC0S	1071312	→ C-68
IME30-38NNOZW2K	1071299	→ C-69
IME30-38NNOZW2S	1071308	→ C-68
IME30-38NNSZC0K	1071303	→ C-69
IME30-38NNSZC0S	1071311	→ C-68
IME30-38NNSZW2K	1071298	→ C-69
IME30-38NNSZW2S	1071307	→ C-68
IME30-38NPOZC0K	1071302	→ C-69
IME30-38NPOZC0S	1071310	→ C-68
IME30-38NPOZW2K	1071297	→ C-69
IME30-38NPOZW2S	1071306	→ C-68
IME30-38NPSZC0K	1071301	→ C-69
IME30-38NPSZC0S	1071309	→ C-68
IME30-38NPSZW2K	1071300	→ C-69

Type	Part no.	Page
IME30-38NPSZW2S	1071305	→ C-68
IMF08-02BNSNC0S	1076749	→ C-102
IMF08-02BPONC0S	1076747	→ C-102
IMF08-02BPPNC0S	1076748	→ C-102
IMF08-02BPSNC0S	1076745	→ C-102
IMF08-04NNSNC0S	1076753	→ C-102
IMF08-04NPONC0S	1076751	→ C-102
IMF08-04NPPNC0S	1076752	→ C-102
IMF08-04NPSNC0S	1076750	→ C-102
IMF12-04BNSNC0S	1076671	→ C-102
IMF12-04BPONC0S	1076670	→ C-102
IMF12-04BPPNC0S	1076674	→ C-102
IMF12-04BPSNC0S	1076673	→ C-102
IMF12-08NNSNC0S	1076677	→ C-102
IMF12-08NPONC0S	1076676	→ C-102
IMF12-08NPPNC0S	1076678	→ C-102
IMF12-08NPSNC0S	1076675	→ C-102
IMF18-08BNSNC0S	1076664	→ C-103
IMF18-08BPONC0S	1076663	→ C-103
IMF18-08BPPNC0S	1076665	→ C-103
IMF18-08BPSNC0S	1076662	→ C-103
IMF18-12NNSNC0S	1076668	→ C-103
IMF18-12NPONC0S	1076667	→ C-103
IMF18-12NPPNC0S	1076669	→ C-103
IMF18-12NPSNC0S	1076666	→ C-103
IMF30-15BNSNC0S	1076657	→ C-103
IMF30-15BPONC0S	1076654	→ C-103
IMF30-15BPPNC0S	1076656	→ C-103
IMF30-15BPSNC0S	1076653	→ C-103
IMF30-20NNSNC0S	1076661	→ C-103
IMF30-20NPONC0S	1076659	→ C-103
IMF30-20NPPNC0S	1076660	→ C-103
IMF30-20NPSNC0S	1076658	→ C-103
IMP05-01BNSVU2S	6050110	→ C-130
IMP05-01BPSVU2S	6050109	→ C-130
IMP08-1B5NSVU2S	6050112	→ C-130
IMP08-1B5PSVU2S	6050111	→ C-130
IMP12-1B5NOVC0B	6050116	→ C-131
IMP12-1B5NOVC0C	6050122	→ C-131
IMP12-1B5NOVC0D	6050128	→ C-131
IMP12-1B5NOVC0F	6050134	→ C-131
IMP12-1B5NPVC0B	6050118	→ C-131
IMP12-1B5NPVC0C	6050124	→ C-131
IMP12-1B5NPVC0D	6050130	→ C-131
IMP12-1B5NPVC0F	6050136	→ C-131
IMP12-1B5NSVC0B	6050115	→ C-131
IMP12-1B5NSVC0C	6050121	→ C-131
IMP12-1B5NSVC0D	6050127	→ C-131
IMP12-1B5NSVC0F	6050133	→ C-131
IMP12-1B5POVC0B	6050114	→ C-131
IMP12-1B5POVC0C	6050120	→ C-131
IMP12-1B5POVC0D	6050126	→ C-131
IMP12-1B5POVC0F	6050132	→ C-131
IMP12-1B5PPVC0B	6050117	→ C-131

Type	Part no.	Page
IMP12-1B5PPVC0C	6050123	→ C-131
IMP12-1B5PPVC0D	6050129	→ C-131
IMP12-1B5PPVC0F	6050135	→ C-131
IMP12-1B5PSVC0B	6050113	→ C-131
IMP12-1B5PSVC0C	6050119	→ C-131
IMP12-1B5PSVC0D	6050125	→ C-131
IMP12-1B5PSVC0F	6050131	→ C-131
IMP14-03BNOVC0S	6050140	→ C-131
IMP14-03BNSVC0S	6050139	→ C-131
IMP14-03BPOVC0S	6050138	→ C-131
IMP14-03BPSVC0S	6050137	→ C-131
IN30-E0208K	6044655	→ D-184
IN30-E0305K	6034576	→ D-184
IN30-E0306K	6034581	→ D-184
IN30-E0407K	6034582	→ D-184
IN40-D0101K	6027389	→ D-194
IN40-D0202K	6027392	→ D-194
IN40-D0303K	6027391	→ D-194
IN40-D0304K	6037684	→ D-194
IN40-E0101K	6027388	→ D-190
IN40-E0109K	6050281	→ D-190
IOLG2EC-03208R01 (IO-Link Master)	6053254	→ H-280
IOLG2EI-03208R01 (IO-Link Master)	6053255	→ H-280
IOLG2PN-03208R01 (IO-Link Master)	6053253	→ H-280
IOLSHPB-P3104R01	6039728	→ H-280
IQ04-1B5NOKW2S	6042020	→ C-144
IQ04-1B5NSKW2S	6042019	→ C-144
IQ04-1B5POKW2S	6042018	→ C-144
IQ04-1B5PSKW2S	6042017	→ C-144
IQ05-0B8NS-ZU1	6020162	→ C-148
IQ05-0B8PO-ZU1	6020163	→ C-148
IQ05-0B8PS-ZU1	6020161	→ C-148
IQ06-03BNOKU2S	6042025	→ C-144
IQ06-03BNSKU2S	6042024	→ C-144
IQ06-03BPOKU2S	6042023	→ C-144
IQ06-03BPSKU2S	6042022	→ C-144
IQ08-02BNOKT0S	1055497	→ C-148
IQ08-02BNOKW2S	1055493	→ C-148
IQ08-02BNSKT0S	1055496	→ C-148
IQ08-02BNSKW2S	1055492	→ C-148
IQ08-02BPOKT0S	1055495	→ C-148
IQ08-02BPOKW2S	1055491	→ C-148
IQ08-02BPSKT0S	1055494	→ C-148
IQ08-02BPSKW2S	1055490	→ C-148
IQ08-04NNOKT0S	1055505	→ C-148
IQ08-04NNOKW2S	1055501	→ C-148
IQ08-04NNSKT0S	1055504	→ C-148
IQ08-04NNSKW2S	1055500	→ C-148
IQ08-04NPOKT0S	1055503	→ C-148
IQ08-04NPOKW2S	1055499	→ C-148
IQ08-04NPSKT0S	1055502	→ C-148

Type	Part no.	Page
IQ08-04NPSKW2S	1055498	→ C-148
IQ10-03BNOKT0S	1055456	→ C-154
IQ10-03BNOKW2S	1055452	→ C-154
IQ10-03BNPKW2S	1055466	→ C-154
IQ10-03BNSKT0S	1055455	→ C-154
IQ10-03BNSKW2S	1055450	→ C-154
IQ10-03BPOKT0S	1055454	→ C-154
IQ10-03BPOKW2S	1055449	→ C-154
IQ10-03BPPKW2S	1055465	→ C-154
IQ10-03BPSKT0S	1055453	→ C-154
IQ10-03BPSKW2S	1055447	→ C-154
IQ10-06NNOKT0S	1055464	→ C-154
IQ10-06NNOKW2S	1055460	→ C-154
IQ10-06NNSKT0S	1055463	→ C-154
IQ10-06NNSKW2S	1055459	→ C-154
IQ10-06NPOKT0S	1055462	→ C-154
IQ10-06NPOKW2S	1055458	→ C-154
IQ10-06NPSKT0S	1055461	→ C-154
IQ10-06NPSKW2S	1055457	→ C-154
IQ12-04BNOKT0S	1055435	→ C-155
IQ12-04BNOKW2S	1055431	→ C-155
IQ12-04BNPKW2S	1055445	→ C-155
IQ12-04BNSKT0S	1055434	→ C-155
IQ12-04BNSKW2S	1055430	→ C-155
IQ12-04BPOKT0S	1055433	→ C-155
IQ12-04BPOKW2S	1055429	→ C-155
IQ12-04BPPKW2S	1055444	→ C-155
IQ12-04BPSKT0S	1055432	→ C-155
IQ12-04BPSKW2S	1055428	→ C-155
IQ12-08NNOKT0S	1055443	→ C-155
IQ12-08NNOKW2S	1055439	→ C-155
IQ12-08NNSKT0S	1055442	→ C-155
IQ12-08NNSKW2S	1055438	→ C-155
IQ12-08NPOKT0S	1055441	→ C-155
IQ12-08NPOKW2S	1055437	→ C-155
IQ12-08NPSKT0S	1055440	→ C-155
IQ12-08NPSKW2S	1055436	→ C-155
IQ20-07BNSDP0S	6042044	→ C-160
IQ20-07BPPDQ0S	6042045	→ C-160
IQ20-07BPSDP0S	6042043	→ C-160
IQ20-07BPSDU2S	6045180	→ C-160
IQ25-05BPPDU2S	6042047	→ C-160
IQ25-05BPSDU2S	6042046	→ C-160
IQ40-20BNOKC0K	1071848	→ C-166
IQ40-20BNOKK0S	1071849	→ C-166
IQ40-20BNPKC0K	1071560	→ C-166
IQ40-20BNPKK0S	1071861	→ C-166
IQ40-20BNSKC0K	1071846	→ C-166
IQ40-20BNSKK0S	1071847	→ C-166
IQ40-20BPOKC0K	1071844	→ C-166
IQ40-20BPOKK0S	1071845	→ C-166
IQ40-20BPPKC0K	1071553	→ C-166
IQ40-20BPPKC0S	1071862	→ C-166
IQ40-20BPPKK0S	1071860	→ C-166

Type	Part no.	Page
IQ40-20BPSKC0K	1071840	→ C-166
IQ40-20BPSKK0S	1071843	→ C-166
IQ40-40NNOKC0K	1071856	→ C-166
IQ40-40NNOKK0S	1071857	→ C-167
IQ40-40NNPKC0K	1071864	→ C-166
IQ40-40NNPKK0S	1071865	→ C-167
IQ40-40NNSKC0K	1071854	→ C-166
IQ40-40NNSKK0S	1071855	→ C-167
IQ40-40NPOKC0K	1071852	→ C-166
IQ40-40NPOKK0S	1071853	→ C-167
IQ40-40NPPKC0K	1071552	→ C-166
IQ40-40NPPKC0S	1071866	→ C-167
IQ40-40NPPKK0S	1071863	→ C-167
IQ40-40NPSKC0K	1071850	→ C-166
IQ40-40NPSKK0S	1071851	→ C-167
IQ80-50BPP-KC0	6026473	→ C-172
IQ80-60NPP-KK0	7900227	→ C-172
IQ80-60NUP-KK0	7902138	→ C-172
MAG-0625-A	7901783	→ H-266
MAG-1003-S	7901782	→ H-266
MAG-2006-B	7901784	→ H-266
MAG-3010-B	7901785	→ H-266
MAG-3015-B	7901786	→ H-266
MAG-3515-B	7902086	→ H-266
MM08-60ANS-ZTK	1040068	→ F-234
MM08-60ANS-ZUK	1040066	→ F-234
MM08-60APS-ZTK	1040067	→ F-234
MM08-60APS-ZUK	1040027	→ F-234
MM12-60A-N-ZC0	7900287	→ F-242
MM12-60A-N-ZW0	7900286	→ F-242
MM12-60ANS-ZCK	1040071	→ F-234
MM12-60ANS-ZUK	1040026	→ F-234
MM12-60APO-ZUK	1040065	→ F-234
MM12-60APS-ZCK	1040070	→ F-234
MM12-60APS-ZUK	1040069	→ F-234
MM12-90A-N-ZUD	1046761	→ F-242
MM12-90ANS-ZU0	1051013	→ F-234
MM12-90APS-ZC0	1029950	→ F-234
MM12-90APS-ZU0	1029951	→ F-234
MM18-00A-N-ZC0	1026614	→ F-242
MM18-00APS-ZCK	1076085	→ F-234
MM18-00APS-ZUK	1077120	→ F-234
MM18-70A-N-ZC0	7900289	→ F-242
MM18-70A-N-ZW0	7900288	→ F-242
MM18-70ANS-ZCK	1040073	→ F-234
MM18-70ANS-ZUK	1040085	→ F-234
MM18-70APO-ZCK	1047255	→ F-234
MM18-70APS-ZCK	1040072	→ F-234
MM18-70APS-ZUK	1040029	→ F-234
MQ10-60ANSKT0	1078009	→ F-248
MQ10-60ANSKU0	1078007	→ F-248
MQ10-60APSKQDS01	1078005	→ F-248
MQ10-60APSKT0	1078008	→ F-248
MQ10-60APSKU0	1078006	→ F-248

Type	Part no.	Page
O-ring IMP05	5327492	→ H-260
O-ring IMP08	5327493	→ H-260
O-ring IMP12	5327494	→ H-260
O-ring IMP14	5327495	→ H-260
STE-0803-G	6037322	→ H-273
STE-0803-WSK	6053170	→ H-273
STE-0804-G	6037323	→ H-273
STE-1204-G	6009932	→ H-273
STE-1204-GN	6028359	→ H-273
STE-1204-GQU6	6042089	→ H-273
STE-1204-TN	6028360	→ H-273
STE-1204-W	6022084	→ H-273
STE-1205-GFE	6044999	→ H-273
STL-1204-G02MC	6028077	→ H-270
STL-1204-G05MC	6048170	→ H-270
STL-1204-G0M3C	6011311	→ H-270
STL-1204-G10MC	6041750	→ H-270
STL-1204-G15MC	6048171	→ H-270
STL-1204-W05MC	6037472	→ H-270
STL-1204-W15MC	6037473	→ H-270
Support ring IMP12	5327496	→ H-260

8014939/2016-08-29 · SKOM · Pre USmod en46

SICK AT A GLANCE

SICK is a leading manufacturer of intelligent sensors and sensor solutions for industrial applications. With more than 7,400 employees and over 50 subsidiaries and equity investments as well as numerous agencies worldwide, we are always close to our customers. A unique range of products and services creates the perfect basis for controlling processes securely and efficiently, protecting individuals from accidents and preventing damage to the environment.

We have extensive experience in various industries and understand their processes and requirements. With intelligent sensors, we can deliver exactly what our customers need. In application centers in Europe, Asia and North America, system solutions are tested and optimized in accordance with customer specifications. All this makes us a reliable supplier and development partner.

Comprehensive services round out our offering: SICK LifeTime Services provide support throughout the machine life cycle and ensure safety and productivity.

For us, that is "Sensor Intelligence."

Worldwide presence:

Australia, Austria, Belgium, Brazil, Canada, Chile, China, Czech Republic, Denmark, Finland, France, Germany, Great Britain, Hungary, India, Israel, Italy, Japan, Malaysia, Mexico, Netherlands, New Zealand, Norway, Poland, Romania, Russia, Singapore, Slovakia, Slovenia, South Africa, South Korea, Spain, Sweden, Switzerland, Taiwan, Thailand, Turkey, United Arab Emirates, USA, Vietnam.

Detailed addresses and further locations → www.sick.com

SICK
Sensor Intelligence.